DISCRETE AND CONTINUOUS
DYNAMICAL SYSTEMS
Volume **33**, Number **3**, March **2013**

doi:10.3934/dcds.2013.33.1089

pp. **1089–1112**

TRANSITION MAP AND SHADOWING LEMMA FOR NORMALLY HYPERBOLIC INVARIANT MANIFOLDS

Amadeu Delshams

Departament de Matemática Aplicada I, ETSEIB-UPC
08028 Barcelona, Spain

Marian Gidea

School of Mathematics, Institute for Advanced Study
Princeton, NJ 08540, USA, and
Department of Mathematics, Northeastern Illinois University
Chicago, IL 60625, USA

Pablo Roldán

Departament de Matemática Aplicada I, ETSEIB-UPC
08028 Barcelona, Spain

Abstract. For a given a normally hyperbolic invariant manifold, whose stable and unstable manifolds intersect transversally, we consider several tools and techniques to detect trajectories with prescribed itineraries: the scattering map, the transition map, the method of correctly aligned windows, and the shadowing lemma. We provide an user's guide on how to apply these tools and techniques to detect unstable orbits in a Hamiltonian system. This consists in the following steps: (i) computation of the scattering map and of the transition map for the Hamiltonian flow, (ii) reduction to the scattering map and to the transition map, respectively, for the return map to some surface of section, (iii) construction of sequences of windows within the surface of section, with the successive pairs of windows correctly aligned, alternately, under the transition map, and under some power of the inner map, (iv) detection of trajectories which follow closely those windows. We illustrate this strategy with two models: the large gap problem for nearly integrable Hamiltonian systems, and the the spatial circular restricted three-body problem.

1. **Introduction.** Consider a normally hyperbolic invariant manifold for a flow or a map, and assume that the stable and unstable manifolds of the normally hyperbolic invariant manifold have a transverse intersection along a homoclinic manifold. One can distinguish an inner dynamics, associated to the restriction of the flow or of the map to the normally hyperbolic invariant manifold, and an outer dynamics, associated to the homoclinic orbits. There exist pseudo-orbits obtained by alternately following the inner dynamics and the outer dynamics for some finite periods of time. An important question on the dynamics is whether there exist true orbits with similar behavior. In this paper, we develop a toolkit of instruments and

2010 *Mathematics Subject Classification.* Primary: 37J40, 37C50, 37C29; Secondary: 37B30.

Key words and phrases. Hamiltonian instability, Arnold diffusion, the three-body problem.

† Research of A.D. and P.R. was partially supported by MICINN-FEDER grant MTM2009-06973 and CUR-DIUE grant 2009SGR859.

‡ Research of M.G. was partially supported by NSF grants: DMS-0601016 and DMS-0635607.

techniques to detect true orbits near a normally hyperbolic invariant manifold, that alternatively follow the inner dynamics and the outer dynamics, for all time. Some of the tools discussed below have already been used in other works. The aim of this paper is to provide a general recipe on how to make a systematic use of these tools in general situations.

The first tool is the scattering map, which is defined on the normally hyperbolic invariant manifold, and assigns to the foot of an unstable fiber passing through a point in the homoclinic manifold, the foot of the corresponding stable fiber that passes through the same point in the homoclinic manifold. This tool, sometimes referred as the homoclinic map, has been used in [10, 12, 7], and subsequently refined and analyzed in [5]. The scattering map can be defined both in the flow case and in the map case. In Section 2 we recall some background on normally hyperbolic invariant manifolds and Lambda Lemma. In Section 3 we describe the relationship between the scattering map for a flow and the scattering map for the return map to a surface of section. We note that the scattering map is defined in terms of the geometric structure, however it is not dynamically defined – there is no actual orbit that is given by the scattering map.

The second tool that we discuss is the transition map, that actually follows the homoclinic orbits for a prescribed time. The transition map can be computed in terms of the scattering map. Again, we will have a transition map for the flow and one for the return map, and we will describe the relationships between them. The transition map is presented in Section 4.

The third tool is the topological method of correctly aligned windows (see [22]), which is used to detect orbits with prescribed itineraries in a dynamical system. A window is a homeomorphic copy of a multi-dimensional rectangle, with a choice of an exit direction and of an entry direction. A window is correctly aligned with another window if the image of the first window crosses the second window all the way through and across its exit set. This method is reviewed briefly in Section 5.

The fourth tool is a shadowing lemma type of result for a normally hyperbolic invariant manifold, presented in Section 6. The assumption is that a bi-infinite sequence of windows lying in the normally hyperbolic invariant manifold is given, with the consecutive pairs of windows being correctly aligned, alternately, under the transition map (outer map), and under some power of the inner map. The role of the windows is to approximate the location of orbits. Then there exists a true orbit that follows closely these windows, in the prescribed order. To apply this lemma for a normally hyperbolic invariant manifold for a map, one needs to reduce the dynamics from the continuous case to the discrete case by considering the return map to a surface of section, and construct the sequence of correctly aligned windows for the return map. For this situation, the relationships between the scattering map for the flow and the scattering map for the return map, and between the transition map for the flow and the transition map for the return map, explored in Section 3 and Section 4, are useful.

A remarkable feature of these tools is that they can be used for both analytic arguments and rigorous numerical verifications. The scattering map and the transition map can be computed explicitly in concrete systems. The main advantage is that they can be used to reduce the dimensionality of the problem: from the phase space of a flow to a normally hyperbolic invariant manifold for the flow, and further to the normally hyperbolic invariant manifold for the return map to a surface of section. The shadowing lemma also plays a key role in reducing the dimensionality

of the problem: it requires the verification of topological conditions in the normally hyperbolic invariant manifold for the return map to conclude the existence of trajectories in the phase space of the flow. In numerical applications, reducing the number of dimensions of the objects computed is very crucial. The potency of these tools in numerical application is illustrated in [4].

The main motivation for developing these tools resides with the instability problem for Hamiltonian systems. In the Appendix we describe two models where the above techniques can be applied to show the existence of unstable orbits. The first model is the large gap problem for nearly integrable Hamiltonian systems. The second model is the spatial circular restricted three-body problem.

In conclusion, we provide a practical recipe for finding trajectories with prescribed itineraries for a normally hyperbolic invariant manifold with the property that its stable and unstable manifolds have a transverse intersection along a homoclinic manifold:

- Compute the scattering map associated to the homoclinic manifold.
- For some prescribed forward and backwards integration times, compute the corresponding transition map.
- If necessary, reduce the dynamics from a flow to the return map via some surface of section. Determine the normally hyperbolic invariant manifold relative to the surface of section, and compute the inner map – the restriction of the return map relative to the normally hyperbolic invariant manifold.
- Compute the scattering map and the transition map for the return map.
- Construct windows within the normally hyperbolic invariant manifold relative to the surface of section, with the the property that the consecutive pairs of windows are correctly aligned, alternately, under the transition map and under some power of the inner map.
- Apply the shadowing lemma stated in Theorem 6.1 to conclude that there exist orbits that follow closely these windows.

2. **Preliminaries.**

In this section we review the concepts of normal hyperbolicity for flows and maps, normally hyperbolic invariant manifold for the return map to a surface of section, and we state a version of the Lambda Lemma that will be used in the subsequent sections.

2.1. **Normally hyperbolic invariant manifolds.**

In this section we recall the concept of a normally hyperbolic invariant manifolds for a map and for a flow, following [11, 17].

Let M be a C^r-smooth, m-dimensional manifold (without boundary), with $r \geq 1$, and $\Phi : M \times \mathbb{R} \to M$ a C^r-smooth flow on M.

Definition 2.1. A submanifold (possibly with boundary) Λ of M is said to be a normally hyperbolic invariant manifold for Φ if Λ is invariant under Φ, there exists a splitting of the tangent bundle of TM into sub-bundles

$$TM = E^u \oplus E^s \oplus T\Lambda,$$

that are invariant under $d\Phi^t$ for all $t \in \mathbb{R}$, and there exist a constant $C > 0$ and rates $0 < \beta < \alpha$, such that for all $x \in \Lambda$ we have

$$v \in E^s_x \Leftrightarrow \|D\Phi^t(x)(v)\| \leq Ce^{-\alpha t}\|v\| \text{ for all } t \geq 0,$$

$$v \in E^u_x \Leftrightarrow \|D\Phi^t(x)(v)\| \leq Ce^{\alpha t}\|v\| \text{ for all } t \leq 0,$$

$$v \in T_x\Lambda \Leftrightarrow \|D\Phi^t(x)(v)\| \leq Ce^{\beta|t|}\|v\| \text{ for all } t \in \mathbb{R}.$$

It follows that there exist stable and unstable manifolds of Λ, as well as stable and unstable manifolds of each point $x \in \Lambda$, which are defined by

$$\begin{aligned} W^s(\Lambda) =& \{y \in M \mid d(\Phi^t(y), \Lambda) \leq C_y e^{-\alpha t} \text{ for all } t \geq 0\}, \\ W^u(\Lambda) =& \{y \in M \mid d(\Phi^t(y), \Lambda) \leq C_y e^{\alpha t} \text{ for all } t \leq 0\}, \\ W^s(x) =& \{y \in M \mid d(\Phi^t(y), \Phi^t(y)(x)) \leq C_{x,y} e^{-\alpha t} \text{ for all } t \geq 0\}, \\ W^u(x) =& \{y \in M \mid d(\Phi^t(y), \Phi^t(y)(x)) \leq C_{x,y} e^{\alpha t} \text{ for all } t \leq 0\}, \end{aligned}$$

for some constants $C_y, C_{x,y} > 0$.

The stable and unstable manifolds of Λ are foliated by stable and unstable manifolds of points, respectively, i.e., $W^s(\Lambda) = \bigcup_{x\in\Lambda} W^s(x)$ and $W^u(\Lambda) = \bigcup_{x\in\Lambda} W^u(x)$.

In the sequel we will assume that Λ is a compact and connected manifold. With no other assumptions, E^s_x and E^u_x depend continuously (but non-smoothly) on $x \in M$; thus the dimensions of E^s_x and E^u_x are independent of x. Below we only consider the case when the dimensions of the stable and unstable bundles are equal. We denote $n = \dim(E^s_x) = \dim(E^u_x)$, $l = \dim(T_x\Lambda)$, where $2n + l = m$.

The smoothness of the invariant objects defined by the normally hyperbolic structure depends on the rates α and β. Let ℓ be a positive integer satisfying $1 \leq \ell < \min\{r, \alpha/\beta\}$. The manifold Λ is C^ℓ-smooth. The stable and unstable manifolds $W^s(\Lambda)$ and $W^u(\Lambda)$ are $C^{\ell-1}$-smooth. The splittings E^s_x and E^u_x depend $C^{\ell-1}$-smoothly on x. The stable and unstable fibers $W^s(x)$ and $W^u(x)$ are C^r-smooth. The stable and unstable fibers $W^s(x)$ and $W^u(x)$ depend $C^{\ell-1-j}$-smoothly on x when $W^s(x), W^u(x)$ are endowed with the C^j-topology. In the sequel we will assume that the rates are such that there exists an integer $\ell \geq 2$ as above, and that all the manifolds and maps considered below are at least C^k-smooth, with $2 \leq k \leq \ell$.

The notion of normal hyperbolicity for maps is very similar. Let $F : M \to M$ be a C^r-smooth map on M.

Definition 2.2. A submanifold Λ of M is said to be a normally hyperbolic invariant manifold for F if Λ is invariant under F, there exists a splitting of the tangent bundle of TM into sub-bundles

$$TM = E^u \oplus E^s \oplus T\Lambda,$$

that are invariant under dF, and there exist a constant $C > 0$ and rates $0 < \lambda < \mu^{-1} < 1$, such that for all $x \in \Lambda$ we have

$$\begin{aligned} v \in E^s_x &\Leftrightarrow \|DF^k_x(v)\| \leq C\lambda^k \|v\| \text{ for all } k \geq 0, \\ v \in E^u_x &\Leftrightarrow \|DF^k_x(v)\| \leq C\lambda^{-k} \|v\| \text{ for all } k \leq 0, \\ v \in T_x\Lambda &\Leftrightarrow \|DF^k_x(v)\| \leq C\mu^{|k|} \|v\| \text{ for all } k \in \mathbb{Z}. \end{aligned}$$

There exist stable and unstable manifolds of Λ, as well as the stable and unstable manifolds of each point $x \in \Lambda$, that are defined similarly as in the flow case, and they carry analogous properties. The smoothness properties of these invariant objects are analogous of those for a flow, if we set $1 \leq \ell < \min\{r, (\log \lambda^{-1})(\log \mu)^{-1}\}$.

2.2. **Normal hyperbolicity relative to the return map.** Let $\Phi : M \times \mathbb{R} \to M$ be a C^r-smooth flow defined on an m-dimensional manifold M. Denote by X the vector field associated to Φ, where $X(x) = \frac{\partial}{\partial t}\Phi(x,t)_{|t=0}$. As before, assume that $\Lambda \subseteq M$ is an l-dimensional normally hyperbolic invariant manifold for Φ. The dimensions of $T\Lambda$, E^u and E^s are l, n, n, respectively, with $l + 2n = m$.

Let Σ be an $(m-1)$-dimensional local surface of section, i.e., Σ is a C^1 submanifold of M such that $X(x) \notin T_x\Sigma$ for all $x \in \Sigma$. Let $\Lambda_\Sigma = \Lambda \cap \Sigma$. Then Λ_Σ is a $(l-1)$-dimensional submanifold in Σ, assuming that the intersection is non-empty.

Assume that each forward and backward orbit through a point in Λ_Σ intersects again Λ_Σ. Since $X(x) \notin T_x\Sigma$ for all $x \in \Sigma$, then the intersection of the forward and backward orbits with Σ are transverse. Also, $X(x) \notin T_x\Lambda_\Sigma$ for all $x \in \Lambda_\Sigma$. Additionally, assume that the function

$$\tau : \Lambda_\Sigma \to (0, \infty), \text{ given by } \tau(x) = \inf\{t > 0 \,|\, \Phi(x, \tau(x)) \in \Lambda_\Sigma\},$$

is a continuous function. Following [11], we will refer to Λ_Σ with these properties as a thin surface of section.

By the Implicit Function Theorem, τ can be extended to a C^1-smooth function in a neighborhood U_Σ of Λ_Σ in Σ such that $\Phi(x, \tau(x)) \in \Sigma$ for all $x \in U_\Sigma$. The Poincaré first return map to Σ is the map $F : U_\Sigma \to \Sigma$ given by $F(x) = \Phi^{\tau(x)}(x)$.

Let $\Lambda_\Sigma^X \subseteq \Lambda$ be the union of the orbits of the flow through points in Λ_Σ. Since Λ_Σ^X is a C^1-submanifold of Λ, and is invariant under Φ, then is a normally hyperbolic invariant manifold for the flow Φ. The theorem below implies that the manifold Λ_Σ is normally hyperbolic for the return map F.

Theorem 2.3. *(Fenichel, [11]) Let Λ_Σ be a thin surface of section for the vector field X on M. Then Λ_Σ is normally hyperbolic with respect to F if and only if Λ_Σ^X is a normally hyperbolic invariant manifold with respect to Φ.*

The invariant sub-bundles $T\Lambda$, E^u, E^s associated to the normal hyperbolic structure on Λ correspond to sub-bundles $T\Lambda_\Sigma$, E^u_Σ, E^s_Σ in the following way. Let $\pi : TM = \text{span}(X) \oplus T\Sigma \to T\Sigma$ be the projection onto $T\Sigma$. Then $T\Lambda_\Sigma = \pi(T_\Lambda)$, $E^u_\Sigma = \pi(E^u)$, and $E^s_\Sigma = \pi(E^s)$.

Note that the surface of section described above is only a local surface of section. It is in general very difficult, or even impossible, to obtain a global surface of section for a flow. However, one can obtain global surfaces of section for Hamiltonian flows on 3-dimensional strictly convex energy surfaces [18].

2.3. **Lambda Lemma.** We describe a Lambda Lemma type of result for normally hyperbolic invariant manifolds that appears in J.-P. Marco [19].

By a normal form in a neighborhood V of Λ in M we mean a C^k-smooth coordinate system (c, s, u) on V such that V is diffeomorphic through (c, s, u) with a product $\Lambda \times \mathbb{R}^n \times \mathbb{R}^n$, where $\Lambda = \{(c, s, u) \,|\, c \in \Lambda, u = s = 0\}$, and $W^u(x) = \{(c, s, u) \,|\, c = c(x), s = 0\}$, $W^s(x) = \{(c, s, u) \,|\, c = c(x), u = 0\}$ for each $x \in \Lambda$ of coordinates $(c(x), 0, 0)$.

Theorem 2.4 (Lambda Lemma)**.** *Suppose that Λ is a normally hyperbolic invariant manifold for F and (c, s, u) is a normal form in a neighborhood of Λ. Consider a submanifold Δ of M of dimension n which intersects the stable manifold $W^s(\Lambda)$ transversely at some point $z = (c, s, 0)$. Set $F^N(z) = z_N = (c_N, s_N, 0)$ for $N \in \mathbb{N}$. Then there exists $\delta > 0$ and $N_0 > 0$ such that for each $N \geq N_0$ the connected component Δ_N of $F^N(\Delta)$ in the δ-neighborhood $V(\delta) = \Lambda \times B^s_\delta(0) \times B^u_\delta(0)$ of Λ in M admits a graph parametrization of the form*

$$\Delta_N := \{(C_N(u), S_N(u), u) \,|\, u \in B^u_\delta(0)\}$$

such that

$$\|C_N - c_N\|_{C^1(B^u_\delta(0))} \to 0, \quad \textit{and } \|S_N\|_{C^1(B^u_\delta(0))} \to 0 \textit{ as } N \to \infty.$$

3. **Scattering map.** In this section we review the scattering map associated to a normally hyperbolic invariant manifold for a flow or for a map, and discuss the relationship between the scattering map for a flow and the scattering map for the corresponding return map to some surface of section.

3.1. **Scattering map for continuous and discrete dynamical systems.** Consider a flow $\Phi : M \times \mathbb{R} \to M$ defined on a manifold M that possesses a normally hyperbolic invariant manifold $\Lambda \subseteq M$.

As the stable and unstable manifolds of Λ are foliated by stable and unstable manifolds of points, respectively, for each $x \in W^u(\Lambda)$ there exists a unique $x_- \in \Lambda$ such that $x \in W^u(x_-)$, and for each $x \in W^s(\Lambda)$ there exists a unique $x_+ \in \Lambda$ such that $x \in W^s(x_+)$. We define the wave maps $\Omega_+ : W^s(\Lambda) \to \Lambda$ by $\Omega_+(x) = x_+$, and $\Omega_- : W^u(\Lambda) \to \Lambda$ by $\Omega_-(x) = x_-$. The maps Ω_+ and Ω_- are C^ℓ-smooth.

We now describe the scattering map, following [7]. Assume that $W^u(\Lambda)$ has a transverse intersection with $W^s(\Lambda)$ along a l-dimensional homoclinic manifold Γ. The manifold Γ consists of a $(l-1)$-dimensional family of trajectories asymptotic to Λ in both forward and backwards time. The transverse intersection of the hyperbolic invariant manifolds along Γ means that $\Gamma \subseteq W^u(\Lambda) \cap W^s(\Lambda)$ and, for each $x \in \Gamma$, we have

$$\begin{aligned} T_xM &= T_xW^u(\Lambda) + T_xW^s(\Lambda), \\ T_x\Gamma &= T_xW^u(\Lambda) \cap T_xW^s(\Lambda). \end{aligned} \tag{1}$$

Let us assume the additional condition that for each $x \in \Gamma$ we have

$$\begin{aligned} T_xW^s(\Lambda) &= T_xW^s(x_+) \oplus T_x(\Gamma), \\ T_xW^u(\Lambda) &= T_xW^u(x_-) \oplus T_x(\Gamma), \end{aligned} \tag{2}$$

where x_-, x_+ are the uniquely defined points in Λ corresponding to x.

The restrictions $\Omega_+^\Gamma, \Omega_-^\Gamma$ of Ω_+, Ω_-, respectively, to Γ are *local* $C^{\ell-1}$ - diffeomorphisms. By restricting Γ even further, if necessary, we can ensure that $\Omega_+^\Gamma, \Omega_-^\Gamma$ are $C^{\ell-1}$-diffeomorphisms. A homoclinic manifold Γ for which the corresponding restrictions of the wave maps are $C^{\ell-1}$-diffeomorphisms will be referred as a homoclinic channel.

Definition 3.1. Given a homoclinic channel Γ, the scattering map associated to Γ is the $C^{\ell-1}$-diffeomorphism $S^\Gamma = \Omega_+^\Gamma \circ (\Omega_-^\Gamma)^{-1}$ defined on the open subset $U_- := \Omega_-^\Gamma(\Gamma)$ in Λ to the open subset $U_+ := \Omega_+^\Gamma(\Gamma)$ in Λ.

See Figure 1. In the sequel we will regard S^Γ as a partially defined map, so the image of a set A by S^Γ is $S^\Gamma(A \cap U_-)$.

If we flow Γ backwards and forward in time we obtain the manifolds $\Phi^{-t_u}(\Gamma)$ and $\Phi^{t_s}(\Gamma)$ that are also homoclinic channels, where $t_u, t_s > 0$. The associated wave maps are $\Omega_+^{\Phi^{-t_u}(\Gamma)}, \Omega_-^{\Phi^{-t_u}(\Gamma)}$, and $\Omega_+^{\Phi^{t_s}(\Gamma)}, \Omega_-^{\Phi^{t_s}(\Gamma)}$, respectively. The scattering map can be expressed with respect to these wave maps as

$$S^\Gamma = \Phi^{-t_s} \circ (\Omega_+^{\Phi^{t_s}(\Gamma)}) \circ \Phi^{t_s+t_u} \circ (\Omega_-^{\Phi^{-t_u}(\Gamma)})^{-1} \circ \Phi^{-t_u}. \tag{3}$$

We recall below some important properties of the scattering map.

Proposition 1. *Assume that* $\dim M = 2n + l$ *is even (i.e.,* l *is even) and* M *is endowed with a symplectic (respectively exact symplectic) form* ω *and that* $\omega_{|\Lambda}$ *is also symplectic. Assume that* Φ^t *is symplectic (respectively exact symplectic). Then, the scattering map* S^Γ *is symplectic (respectively exact symplectic).*

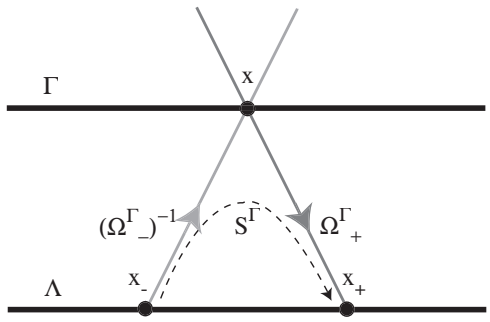

FIGURE 1. Scattering map.

Proposition 2. *Assume that T_1 and T_2 are two invariant submanifolds of complementary dimensions in Λ. Then $W^u(T_1)$ has a transverse intersection with $W^s(T_2)$ in M if and only if $S(T_1)$ has a transverse intersection with T_2 in Λ.*

In the case of a discrete dynamical system consisting of a diffeomorphism $F : M \to M$ defined on a manifold M, the scattering map is defined in a similar way. We assume that F has a normally hyperbolic invariant manifold $\Lambda \subseteq M$. The wave maps are defined by $\Omega_+ : W^s(\Lambda) \to \Lambda$ with $\Omega_+(x) = x_+$, and $\Omega_- : W^u(\Lambda) \to \Lambda$ with $\Omega_-(x) = x_-$.

Assume that $W^u(\Lambda)$ and $W^s(\Lambda)$ have a differentiably transverse intersection along a homoclinic l-dimensional $C^{\ell-1}$-smooth manifold Γ. We also assume the transverse foliation condition (2).

A homoclinic manifold Γ for which the corresponding restrictions of the wave maps are $C^{\ell-1}$-diffeomorphisms is referred as a homoclinic channel.

Definition 3.2. Given a homoclinic channel Γ, the scattering map associated to Γ is the $C^{\ell-1}$-diffeomorphism $S^{\Gamma} = \Omega^{\Gamma}_{+} \circ (\Omega^{\Gamma}_{-})^{-1}$ defined on the open subset $U_- := \Omega^{\Gamma}_{-}(\Gamma)$ in Λ to the open subset $U_+ := \Omega^{\Gamma}_{+}(\Gamma)$ in Λ.

Note that for $M, N > 0$, the manifolds $F^{-M}(\Gamma)$ and $F^{N}(\Gamma)$ are also homoclinic channels. The associated wave maps are $\Omega^{F^{-M}(\Gamma)}_{-}, \Omega^{F^{-M}(\Gamma)}_{+}$, and $\Omega^{F^{N}(\Gamma)}_{-}, \Omega^{F^{N}(\Gamma)}_{+}$. The scattering map can be expressed with respect to these wave map as

$$S^{\Gamma} = F^{-N} \circ (\Omega^{F^{N}(\Gamma)}_{+}) \circ F^{M+N} \circ (\Omega^{F^{-M}(\Gamma)}_{-})^{-1} \circ F^{-M}. \tag{4}$$

The scattering map for the discrete case satisfies symplectic and transversality properties similar to those in Proposition 1 and Proposition 2 for the continuous case.

3.2. **Scattering map for the return map.** Let $\Phi : M \times \mathbb{R} \to M$ be a C^r-smooth flow defined on an m-dimensional manifold M, and X be the vector field associated to Φ. Let $\Lambda \subseteq M$ be an l-dimensional normally hyperbolic invariant manifold for Φ. Assume that Σ is a local surface of section and $\Lambda_{\Sigma} = \Lambda \cap \Sigma$ satisfies the conditions in Subsection 2.2.

Consider Γ a homoclinic channel for Φ. First, we assume that Γ has a non-empty intersection with Σ. Note that Γ is a $(l-1)$-parameter family of orbits; we further assume that each trajectory intersects Σ transversally. Since Γ is a homoclinic channel, each orbit intersects Σ exactly once. Let $\Gamma_{\Sigma} = \Gamma \cap \Sigma$. It is easy to see that Γ_{Σ} is a homoclinic channel for F. Thus, we have a scattering map S^{Γ} for Γ

associated to the flow Φ, and we also have a scattering map S^{Γ_Σ} for Γ_Σ associated to the map F.

We want to understand the relationship between S^Γ and S^{Γ_Σ}. Associated to the homoclinic channels Γ and Γ_Σ there exist wave maps $\Omega^\Gamma_\pm : \Gamma \to \Lambda$ and $\Omega^{\Gamma_\Sigma}_\pm : \Gamma_\Sigma \to \Lambda_\Sigma$, respectively. These maps are diffeomorphisms. Let $x \in \Gamma_\Sigma$, and let $x_- = \Omega^\Gamma_-(x)$, $x_+ = \Omega^\Gamma_+(x)$, and $\hat{x}_- = \Omega^{\Gamma_\Sigma}_-(x)$, $\hat{x}_+ = \Omega^{\Gamma_\Sigma}_+(x)$. We have $S^\Gamma(x_-) = x_+$ and $S^{\Gamma_\Sigma}(\hat{x}_-) = \hat{x}_+$.

We want to relate x_- with $\hat{x}_-$, and x_+ with $\hat{x}_+$. These points are all in Λ. It is clear that $\hat{x}_- = \Omega^{\Gamma_\Sigma}_- \circ (\Omega^\Gamma_-)^{-1}(x_-)$, and $\hat{x}_+ = \Omega^{\Gamma_\Sigma}_+ \circ (\Omega^\Gamma_+)^{-1}(x_+)$. Denote by $P^\Gamma_- : \Omega^\Gamma_-(\Gamma) \to \Omega^{\Gamma_\Sigma}_-$ the map given by $P^\Gamma_- = \Omega^{\Gamma_\Sigma}_- \circ (\Omega^\Gamma_-)^{-1}$, and denote by $P^\Gamma_+ : \Omega^\Gamma_+(\Gamma) \to \Omega^{\Gamma_\Sigma}_+$ the map given by $P^\Gamma_+ = \Omega^{\Gamma_\Sigma}_+ \circ (\Omega^\Gamma_+)^{-1}$. We want to express these maps in terms of the dynamics restricted to Λ.

Let V be a flow box at $\hat{x}_-$ (for definition see [21]). This means each trajectory through a point $y \in V$ intersects Σ exactly once. Then there exists a differentiable function $\hat{\tau} : V \to \mathbb{R}$ defined by $\tau(z) = 0$ if $z \in \Sigma$ and $\Phi^{\hat{\tau}(y)}(y) \in \Sigma$ for each $y \in V$. The function $\hat{\tau}$ can be extended in a unique way on each trajectory passing though V. Due to the relationship between the invariant bundles for the flow and the invariant bundles for the map described in Subsection 2.2, the fiber $E^u_\Sigma(\hat{x}_-)$ is the projection onto $T\Sigma$ of the image of the fiber $E^u(x_-)$ under $D\Phi^{\hat{\tau}(x_-)}_{x_-}$. This means that $\Phi^{\hat{\tau}(x_-)}(x_-) = \hat{x}_-$. In other words, $\hat{x}_-$ is at the intersection of the trajectory through x_- with Σ. Thus, the projection P^Γ_- that takes x_- to $\hat{x}_-$ is given by $P^\Gamma_-(x_-) = \Phi^{\hat{\tau}(x_-)}(x_-)$. This projection map is invertible. If $\hat{y}_-$ is a point in $\Omega^{\Gamma_\Sigma}_-$, there exists a unique point $y_- \in \Omega^\Gamma_-(\Gamma)$ such that $\Phi^{\hat{\tau}(y_-)}(y_-) = \hat{y}_-$. If there exist two such points, y_- and y'_-, to them they correspond two points y, y' in Γ_Σ such that $y \in W^u_F(y_-)$ and $y' \in W^u_F(y'_-)$. The points y, y' should belong to the same unstable fiber $W^u_F(\hat{y}_-)$. Then it means that y, y' are on the same trajectory. As they are also in Γ and Γ is a homoclinic channel, than $y = y'$ and $y_- = y'_-$. In summary, the projection map $P^\Gamma_- : \Omega^\Gamma_-(\Gamma) \to \Omega^{\Gamma_\Sigma}_-$ is given by $P^\Gamma_-(x_-) = \Phi^{\tau(x_-)}(x_-)$. Similarly, the projection map $P^\Gamma_+ : \Omega^\Gamma_+(\Gamma) \to \Omega^{\Gamma_\Sigma}_+$ is given by $P^\Gamma_+(x_+) = \Phi^{\tau(x_+)}(x_+)$. See Figure 2.

Now we can formulate the relationship between the scattering map S^Γ associated to the flow Φ, and the scattering map S^{Γ_Σ} associated to the map F.

Proposition 3. *Assume that Γ is a homoclinic channel for the flow Φ, and $\Gamma_\Sigma = \Gamma \cap \Sigma$ is the corresponding homoclinic channel for the map F. Let S^Γ be the scattering map corresponding to Γ, and let S^{Γ_Σ} be the scattering map corresponding to Γ_Σ. Then:*

$$S^{\Gamma_\Sigma} = P^\Gamma_+ \circ S^\Gamma \circ (P^\Gamma_-)^{-1}. \tag{5}$$

Proof. We have that $S^\Gamma(x_-) = x_+$, $S^{\Gamma_\Sigma}(\hat{x}_-) = \hat{x}_+$, $P^\Gamma_-(x_-) = \hat{x}_-$, and $P^\Gamma_-(x_+) = \hat{x}_+$. Thus $S^{\Gamma_\Sigma}(\hat{x}_-) = P^\Gamma_+(x_+) = P^\Gamma_+ \circ S^\Gamma(x_-) = P^\Gamma_+ \circ S^\Gamma \circ (P^\Gamma_-)^{-1}(\hat{x}_-)$. □

4. **Transition map.** The scattering map for a flow Φ is geometrically defined: $S^\Gamma(x_-) = x_+$ means that $W^u(x_-)$ intersects $W^s(x_+)$ at a unique point $x \in \Gamma$, with $W^u(x_-)$ and $W^s(x_+)$ being n-dimensional manifolds. However, there is no trajectory of the system that goes from near x_- to near x_+. Instead, the trajectory of x approaches asymptotically the backwards orbit of x_- in negative time, and approaches asymptotically the forward orbit of x_+ in positive time. For applications we need a dynamical version of the scattering map. That is, we need a map that

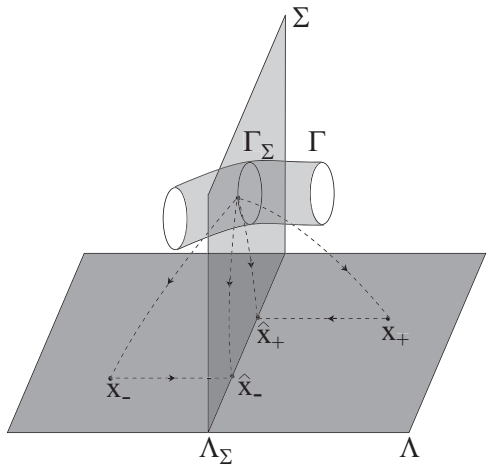

FIGURE 2. Scattering map for the return map.

takes some backwards image of x_- into some forward image of x_+. We will call this map a transition map. The transition map depends on the amounts of times we want to flow in the past and in the future. The transition map carries the same geometric information as the scattering map. Since in perturbation problems the scattering map can be computed explicitly, the transition map is also computable. The notion of transition map below is similar to the transition map defined in [3], however, their version is not related to the scattering map.

4.1. **Transition map for continuous and discrete dynamical systems.** Consider a flow $\Phi : M \times \mathbb{R} \to M$ defined on a manifold M that possesses a normally hyperbolic invariant manifold $\Lambda \subseteq M$. Assume that $W^u(\Lambda)$ and $W^s(\Lambda)$ have a transverse intersection, and that there exists a homoclinic channel Γ. Given $t_u, t_s > 0$, the time-map $\Phi^{t_s+t_u}$ is a diffeomorphism from $\Phi^{-t_u}(\Gamma)$ to $\Phi^{t_s}(\Gamma)$. Using (3) we can express the restriction of $\Phi^{t_s+t_u}$ to $\Phi^{-t_u}(\Gamma)$ in terms of the scattering map as

$$\Phi^{t_s+t_u}_{|\Phi^{-t_u}(\Gamma)} : (\Omega_-^{\Phi^{-t_u}(\Gamma)})^{-1}(\Phi^{-t_u}(U_-)) \to (\Omega_+^{\Phi^{t_s}(\Gamma)})^{-1}(\Phi^{t_s}(U_+)),$$

given by

$$\Phi^{t_s+t_u}_{|\Phi^{-t_u}(\Gamma)} = (\Omega_+^{\Phi^{t_s}(\Gamma)})^{-1} \circ \Phi^{t_s} \circ S^\Gamma \circ \Phi^{t_u} \circ (\Omega_-^{\Phi^{-t_u}(\Gamma)}), \tag{6}$$

where $S^\Gamma : U_- \to U_+$ is the scattering map associated to the homoclinic channel Γ. We use this to define the transition map as an an approximation of $\Phi^{t_s+t_u}_{|\Phi^{-t_u}(\Gamma)}$ provided that t_u, t_s are sufficiently large.

Definition 4.1. Let Γ be a homoclinic channel for Φ. Let $t_u, t_s > 0$ fixed. The transition map $S^\Gamma_{t_u,t_s}$ is a diffeomorphism

$$S^\Gamma_{t_u,t_s} : \Phi^{-t_u}(U_-) \to \Phi^{t_s}(U_+)$$

given by

$$S^\Gamma_{t_u,t_s} = \Phi^{t_s} \circ S^\Gamma \circ \Phi^{t_u},$$

where $S^\Gamma : U_- \to U_+$ is the scattering map associated to the homoclinic channel Γ.

Alternatively, we can express the transition map as

$$S^{\Gamma}_{t_u,t_s} = \Omega_+^{\Phi^{t_s}(\Gamma)} \circ \Phi^{t_u+t_s} \circ (\Omega_-^{\Phi^{-t_u}(\Gamma)})^{-1}$$

The symplectic property and the transversality property of the scattering map lend themselves to similar properties of the transition map.

In the case of a dynamical system given by a map $F : M \to M$, the transition map can be defined in a similar manner to the flow case, and enjoys similar properties. As before, we assume that $\Lambda \subseteq M$ is a normally hyperbolic invariant manifold for F.

Definition 4.2. Let Γ be a homoclinic channel for F. Let $N_u, N_s > 0$ fixed. The transition map $S^{\Gamma}_{N_u,N_s}$ is a diffeomorphism

$$S^{\Gamma}_{N_u,N_s} : F^{-N_u}(U_-) \to F^{N_s}(U_+)$$

given by

$$S^{\Gamma}_{N_u,N_s} = F^{N_s} \circ S^{\Gamma} \circ F^{N_u},$$

where $S^{\Gamma} : U_- \to U_+$ is the scattering map associated to the homoclinic channel Γ.

4.2. **Transition map for the return map.** We will consider the reduction of the transition map to a local surface of section. Let Σ be a local surface of section and $\Lambda_\Sigma = \Lambda \cap \Sigma$. By Theorem 2.3, Λ_Σ is normally hyperbolic with respect to the first return map to Σ. Assume that Γ intersects Σ as in Subsection 2.2, and let $\Gamma_\Sigma = \Gamma \cap \Sigma$.

Let x be a point in Γ_Σ. Then $\Phi^{-t_u}(x)$ lies on $W^u(\Phi^{-t_u}(x_-))$, approaches asymptotically Λ as $t_u \to \infty$, and intersects Σ infinitely many times. Similarly, $\Phi^{t_s}(x)$ lies on $W^u(\Phi^{t_s}(x_+))$, approaches asymptotically Λ as $t_s \to \infty$, and intersects Σ infinitely many times.

We want to choose and fix some times t_u, t_s, depending on $x \in \Gamma$, such that $\Phi^{-t_u}(x), \Phi^{t_s}(x)$ are both in Σ, and moreover, $\Phi^{-t_u}(x), \Phi^{t_s}(x)$ are sufficiently close to $\Phi^{-t_u}(x_-), \Phi^{t_s}(x_+)$, respectively.

Let $\upsilon > 0$ be a small positive number. We define $t_u = t_u(x)$ to be the smallest time such that $\Phi^{-t_u(x)}(x) \in \Sigma$, and the distance between $\Phi^{-t_u}(x)$ and $\Phi^{-t_u}(x_-)$, measured along the unstable fiber $W^u(\Phi^{-t_u}(x_-))$, is less than υ. Let $N_u > 0$ be such that $\Phi^{-t_u}(x) = F^{-N_u}(x)$. Similarly, we define $t_s = t_s(x)$ to be the smallest time such that $\Phi^{t_s}(x) \in \Sigma$, and the distance between $\Phi^{t_s}(x)$ and $\Phi^{t_s}(x_+)$, measured along the stable fiber $W^s(\Phi^{t_s}(x_+))$, is less than υ. Let $N_s > 0$ be such that $\Phi^{t_s}(x) = F^{N_S}(x)$.

At this point, we have a transition map $S^{\Gamma}_{t_u,t_s}$ associated to the flow Φ and to the homoclinic channel Γ for the flow, and a transition map $S^{\Gamma_\Sigma}_{N_u,N_s}$ associated to the map F and to the homoclinic channel Γ_Σ for the map.

We have that $\Phi^{-t_u}(\Gamma)$ and $\Phi^{t_s}(\Gamma)$ are both homoclinic channels for the flow Φ, and $F^{-N_u}(\Gamma)$ and $F^{N_s}(\Gamma)$ are both homoclinic channels for the map F. Let us consider the projection mappings $P_-^{F^{-N_u}}(\Gamma), P_+^{F^{-N_u}}(\Gamma)$ associated to the homoclinic channel $F^{-N_u}(\Gamma)$, and the projection mappings $P_-^{F^{N_s}}(\Gamma), P_+^{F^{N_s}}(\Gamma)$ associated to the homoclinic channel $F^{N_s}(\Gamma)$. These projections mappings are defined as in Subsection 2.2.

The relationship between the transition map for the flow Φ and the transition map for the return map F is given by the following:

Proposition 4. *Assume that Γ is a homoclinic channel for the flow Φ, and $\Gamma_\Sigma = \Gamma \cap \Sigma$ is the corresponding homoclinic channel for the map F. Let t_u, t_s, N_u, $N_s > 0$ be fixed. Let $S^{\Gamma}_{N_u,N_s}$ be the transition map corresponding to Γ for the flow Φ, and let $S^{\Gamma_\Sigma}_{N_u,N_s}$ be the transition map corresponding to Γ_Σ for the return map F. Then*

$$S^{\Gamma_\Sigma}_{N_u,N_s} = P_+^{F^{N_s}(\Gamma)} \circ S^{\Gamma}_{t_u,t_s} \circ (P_-^{F^{-N_u}(\Gamma)})^{-1}.$$

Proof. We have that $S^{\Gamma_\Sigma}(\hat{x}_-) = \hat{x}_+$. Note that $\hat{x}_- = F^{N_u} \circ P_-^{F^{-N_u}(\Gamma)} \circ \Phi^{-t_u}(x_-)$ and $\hat{x}_+ = F^{-N_s} \circ P_+^{F^{N_s}(\Gamma)} \circ \Phi^{t_s}(x_+)$.

Thus

$$\begin{aligned} S^{\Gamma_\Sigma}(\hat{x}_-) &= \hat{x}_+ \\ &= F^{-N_s} \circ P_+^{F^{N_s}(\Gamma)} \circ \Phi^{t_s}(x_+) \\ &= F^{-N_s} \circ P_+^{F^{N_s}(\Gamma)} \circ \Phi^{t_s} \circ S(x_-) \\ &= F^{-N_s} \circ P_+^{F^{N_s}(\Gamma)} \circ \Phi^{t_s} \circ S \circ \Phi^{t_u} \circ (P_-^{F^{-N_u}(\Gamma)})^{-1} \circ F^{-N_u}(\hat{x}_-). \end{aligned}$$

Hence

$$F^{N_s} \circ S^{\Gamma_\Sigma} \circ F^{N_u} = P_+^{F^{N_s}(\Gamma)} \circ \Phi^{t_s} \circ S^{\Gamma} \circ \Phi^{t_u} \circ (P_-^{F^{-N_u}(\Gamma)})^{-1}.$$

The conclusion of the proposition now follows from the definition of the transition map in the flow case and the definition of the transition map in the map case. □

5. **Topological method of correctly aligned windows.** We review briefly the topological method of correctly aligned windows. We follow [22]. See also [14, 13].

Definition 5.1. An (m_1, m_2)-window in an m-dimensional manifold M, where $m_1 + m_2 = m$, is a compact subset R of M together with a C^0-parametrization given by a homeomorphism χ from some open neighborhood of $[0,1]^{m_1} \times [0,1]^{m_2}$ in $\mathbb{R}^{m_1} \times \mathbb{R}^{m_2}$ to an open subset of M, with $R = \chi([0,1]^{m_1} \times [0,1]^{m_2})$, and with a choice of an 'exit set'

$$R^{\text{exit}} = \chi\left(\partial[0,1]^{m_1} \times [0,1]^{m_2}\right)$$

and of an 'entry set'

$$R^{\text{entry}} = \chi\left([0,1]^{m_1} \times \partial[0,1]^{m_2}\right).$$

We adopt the following notation: $R_\chi = \chi^{-1}(R)$, $(R^{\text{exit}})_\chi = \chi^{-1}(R^{\text{exit}})$, and $(R^{\text{entry}})_\chi = \chi^{-1}(R^{\text{entry}})$. (Note that $R_\chi = [0,1]^{m_1} \times [0,1]^{m_2}$, $(R^{\text{exit}})_\chi = \partial[0,1]^{m_1} \times [0,1]^{m_2}$, and $(R^{\text{entry}})_\chi = [0,1]^{m_1} \times \partial[0,1]^{m_2}$.) When the local parametrization χ is evident from context, we suppress the subscript χ from the notation.

Definition 5.2. Let R_1 and R_2 be (m_1, m_2)-windows, and let χ_1 and χ_2 be the corresponding local parametrizations. Let F be a continuous map on M with $F(\text{im}(\chi_1)) \subseteq \text{im}(\chi_2)$. We say that R_1 is correctly aligned with R_2 under F if the following conditions are satisfied:

(i) There exists a continuous homotopy $h : [0,1] \times (R_1)\chi_1 \to \mathbb{R}^{m_1} \times \mathbb{R}^{m_2}$, such that the following conditions hold true

$$\begin{aligned} h_0 &= F_\chi, \\ h([0,1], (R_1^{\text{exit}})_{\chi_1}) \cap (R_2)_{\chi_2} &= \emptyset, \\ h([0,1], (R_1)_{\chi_1}) \cap (R_2^{\text{entry}})_{\chi_2} &= \emptyset, \end{aligned}$$

where $F_\chi = \chi_2^{-1} \circ F \circ \chi_1$, and

(ii) There exists $y_0 \in [0,1]^{m_2}$ such that the map $A_{y_0} : \mathbb{R}^{m_1} \to \mathbb{R}^{m_1}$ defined by $A_{y_0}(x) = \pi_{m_1}(h_1(x, y_0))$ satisfies

$$A_{y_0}(\partial[0,1]^{m_1}) \subseteq \mathbb{R}^{m_1} \setminus [0,1]^{m_1},$$
$$\deg(A_{y_0}, 0) \neq 0,$$

where $\pi_{m_1} : \mathbb{R}^{m_1} \times \mathbb{R}^{m_2} \to \mathbb{R}^{m_1}$ is the projection onto the first component, and deg is the Brouwer degree of the map A_{y_0} at 0.

The following result allows the detection of orbits with prescribed itineraries.

Theorem 5.3. *Let $\{R_i\}_{i\in\mathbb{Z}}$, be a collection of (m_1, m_2)-windows in M, and let F_i be a collection of continuous maps on M. If for each $i \in \mathbb{Z}$, R_i is correctly aligned with R_{i+1} under F_i, then there exists a point $p \in R_0$ such that*

$$(F_i \circ \cdots \circ F_0)(p) \in R_{i+1}, \text{ for all } i \in \mathbb{Z}.$$

Moreover, under the above conditions, and assuming that for some $k > 0$ we have $R_i = R_{(i \bmod k)}$ and $F_i = F_{(i \bmod k)}$ for all $i \in \mathbb{Z}$, then there exists a point p as above that is periodic in the sense

$$(F_{k-1} \circ \cdots \circ F_0)(p) = p.$$

Often, the maps F_i represent different powers of the return map associated to a certain surface of section. The orbit of the point p found above is not necessarily unique.

The correct alignment of windows is robust, in the sense that if two windows are correctly aligned under a map, then they remain correctly aligned under a sufficiently small perturbation of the map.

Proposition 5. *Assume R_1, R_2 are (m_1, m_2)-windows in M. Let G be a continuous maps on M. Assume that R_1 is correctly aligned with R_2 under G. Then there exists $\epsilon > 0$, depending on the windows R_1, R_2 and G, such that, for every continuous map F on M with $\|F(x) - G(x)\| < \epsilon$ for all $x \in R_1$, we have that R_1 is correctly aligned with R_2 under F.*

Also, the correct alignment satisfies a natural product property. Given two windows and a map, if each window can be written as a product of window components, and if the components of the first window are correctly aligned with the corresponding components of the second window under the appropriate components of the map, then the first window is correctly aligned with the second window under the given map. For example, if we consider a pair of windows in a neighborhood of a normally invariant normally hyperbolic invariant manifold, if the center components of the windows are correctly aligned and the hyperbolic components of the windows are also correctly aligned, then the windows are correctly aligned. Although the product property is quite intuitive, its rigorous statement is rather technical, so we will omit it here. The details can be found in [13].

6. A shadowing lemma for normally hyperbolic invariant manifolds.

In this section we present a shadowing lemma-type of result. It is assumed the existence of a sequence of windows in the normally hyperbolic invariant manifold Λ, with the windows of the same dimension l as Λ. It is assumed that the sequence of windows is made up of pairs of windows D_i^-, D_{i+1}^+ that are correctly aligned under the transition map $S^{\Gamma}_{N_i^-, N_{i+1}^+}$, alternately with pairs of windows D_{i+1}^+, D_{i+1}^- that are

correctly aligned under some power $F^{N_i^0}$ of the restriction of F to Λ. Here, the superscript $\pm$ for the windows $D_i^\pm$ suggest that $D_i^\pm$ is typically obtained by taking some positive (negative) iteration of some other window that lies in the codomain (domain) of the scattering map.

It is required that the numbers N_i^0, N_i^-, N_i^+ can be chosen arbitrarily large, but uniformly bounded relative to j. The conclusion is that there exists a true orbit in the full space dynamics that follows these windows arbitrarily closely. The resulting orbit is not necessarily unique.

The result below provides a method to reduce the problem of the existence of orbits in the full dimensional phase space to a lower dimensional problem of the existence of pseudo-orbits in the normally hyperbolic invariant manifold.

Theorem 6.1. *Assume that there exists a bi-infinite sequence $\{D_i^+, D_i^-\}_{i\in\mathbb{Z}}$ of l-dimensional windows contained in a compact subset of Λ such that, for any integers $n_1^0, n_1^-, n_1^+ > 0$, there exist integers $n_2^0 > n_1^0$, $n_2^- > n_1^-$, $n_2^+ > n_1^+$ and sequences of integers $\{N_i^0, N_i^-, N_i^+,\}_{i\in\mathbb{Z}}$ with $n_1^0 < N_i^0 < n_2^0$, $n_1^- < N_i^- < n_2^-$, $n_1^+ < N_i^+ < n_2^+$ such that the following properties hold for all $i \in \mathbb{Z}$:*

(i) $F^{-N_i^+}(D_i^+) \subseteq U_+$ and $F^{N_i^-}(D_i^-) \subseteq U_-$.

(ii) D_i^- is correctly aligned with D_{i+1}^+ under the transition map $S^\Gamma_{N_i^-, N_{i+1}^+} = F^{N_{i+1}^+} \circ S \circ F^{N_i^-}$.

(iii) D_i^+ is correctly aligned with D_i^- under the iterate $F^{N_i^0}$ of $F_{|\Lambda}$.

Then, for every $\varepsilon > 0$, there exist an orbit $\{F^N(z)\}_{N\in\mathbb{Z}}$ of F for some $z \in M$, and an increasing sequence of integers $\{N_i\}_{i\in\mathbb{Z}}$ with $N_{i+1} = N_i + N_{i+1}^+ + N_{i+1}^0 + N_{i+1}^-$ such that, for all i:

$$d(F^{N_i}(z), \Gamma) < \varepsilon,$$
$$d(F^{N_i - N_i^-}(z), D_i^-) < \varepsilon,$$
$$d(F^{N_i + N_{i+1}^+}(z), D_{i+1}^+) < \varepsilon.$$

Proof. The idea of this proof is to 'thicken' the windows D_i^+, D_i^- in Λ to full-dimensional windows R_i^-, R_i^+ in M, so that the successive windows in the sequence $\{R_i^-, R_i^+\}_i$ are correctly aligned under some appropriate iterations of the map F. The argument is done in several steps. In the first three steps, we only specify the relative sizes of the windows involved in each step. In the fourth step, we explain how to make the choices of the sizes of the windows uniform.

Step 1. At this step, we take a pair of l-dimensional windows D_i^- and D_{i+1}^+ as in the statement of the theorem and, through applying iteration and the wave maps we construct two $(l+2n)$-dimensional windows $\bar{R}_i^-$ and $\bar{R}_{i+1}^+$ near Γ such that $\bar{R}_i^-$ is correctly aligned with $\bar{R}_{i+1}^+$ under the identity map.

Note that conditions (i) and (ii) imply that $\hat{D}_i^- := F^{N_i^-}(D_i^-) \subseteq U_- \subseteq \Lambda$ is correctly aligned with $\hat{D}_{i+1}^+ := F^{-N_{i+1}^+}(D_{i+1}^+) \subseteq U_+ \subseteq \Lambda$ under the scattering map S. Let $\bar{D}_i^- = (\Omega_-^\Gamma)^{-1}(\hat{D}_i^-)$ and $\bar{D}_{i+1}^+ = (\Omega_+^\Gamma)^{-1}(\hat{D}_{i+1}^+)$ be the copies of $\hat{D}_i^-$ and $\hat{D}_{i+1}^+$, respectively, in the homoclinic channel Γ. By making some arbitrarily small changes in the sizes of their exit and entry directions, we can alter the windows $\hat{D}_i^-$ and $\hat{D}_{i+1}^+$ such that $\hat{D}_i^-$ is correctly aligned with $\bar{D}_i^-$ under $(\Omega_\Gamma^-)^{-1}$, $\bar{D}_i^-$ is correctly aligned with $\bar{D}_{i+1}^+$ under the identity mapping, and $\bar{D}_{i+1}^+$ is correctly aligned with $\hat{D}_{i+1}^+$ under Ω_Γ^+.

We 'thicken' the l-dimensional windows $\bar{D}_i^-$ and $\bar{D}_{i+1}^+$ in Γ, which are correctly aligned under the identity mapping, to $(l+2n)$-dimensional windows that are correctly aligned under the identity map. We now explain the 'thickening' procedure.

First, we describe how to thicken $\bar{D}_i^-$ to a full dimensional window $\bar{R}_i^-$. We choose some $0 < \bar{\delta}_i^- < \varepsilon$ and $0 < \bar{\eta}_i^- < \varepsilon$. At each point $x \in \bar{D}_i^-$ we choose an n-dimensional closed ball $\bar{B}^-_{\bar{\delta}_i^-}(x)$ of radius $\bar{\delta}_i^-$ centered at x and contained in $W^u(x_-)$, where $x_- = \Omega_-^\Gamma(x)$. We take the union $\bar{\Delta}_i^- := \bigcup_{x\in\bar{D}_i^-} \bar{B}^u_{\bar{\delta}_i^-}(x)$. Note that $\bar{\Delta}_i^-$ is contained in $W^u(\Lambda)$ and is homeomorphic to an $(l+n)$-dimensional rectangle. We define the exit set and the entry set of this rectangle as follows:

$$(\bar{\Delta}_i^-)^{\text{exit}} := \bigcup_{x\in(\bar{D}_i^-)^{\text{exit}}} \bar{B}^u_{\bar{\delta}_i^-}(x) \cup \bigcup_{x\in\bar{D}_i^-} \partial\bar{B}^u_{\bar{\delta}_i^-}(x),$$
$$(\bar{\Delta}_i^-)^{\text{entry}} := \bigcup_{x\in(\bar{D}_i^-)^{\text{entry}}} \bar{B}^u_{\bar{\delta}_i^-}(x).$$

We consider the normal bundle N^+ to $W^u(\Lambda)$. At each point $y \in \bar{\Delta}_i^-$, we choose an n-dimensional closed ball $\bar{B}^+_{\bar{\eta}_i^-}(y)$ centered at y and contained in the image of $N_y^+ \subseteq T_yM$ under the exponential map $\exp_y : N_y^+ \to M$. We let $\bar{R}_i^- := \bigcup_{y\in\bar{\Delta}_i^-} \bar{B}^s_{\bar{\eta}_i^-}(y)$. By the Tubular Neighborhood Theorem (see, for example [2]), we have that for $\bar{\eta}_i^- > 0$ sufficiently small, the set $\bar{R}_i^-$ is a homeomorphic copy of an $(l+2n)$-rectangle. We now define the exit set and the entry set of $\bar{R}_i^-$ as follows:

$$(\bar{R}_i^-)^{\text{exit}} := \bigcup_{y\in(\bar{\Delta}_i^-)^{\text{exit}}} \bar{B}^s_{\bar{\eta}_i^-}(y),$$
$$(\bar{R}_i^-)^{\text{entry}} := \bigcup_{y\in(\bar{\Delta}_i^-)^{\text{entry}}} \bar{B}^s_{\bar{\eta}_i^-}(y) \cup \bigcup_{y\in(\bar{\Delta}_i^-)} \partial\bar{B}^s_{\bar{\eta}_i^-}(y).$$

Second, we describe in a similar fashion how to thicken $\bar{D}_{i+1}^+$ to a full dimensional window $\bar{R}_{i+1}^+$. We choose $0 < \bar{\delta}_{i+1}^+ < \varepsilon$ and $0 < \bar{\eta}_{i+1}^+ < \varepsilon$. We consider the $(l+n)$-dimensional rectangle $\bar{\Delta}_{i+1}^+ := \bigcup_{x\in\bar{D}_{i+1}^+} \bar{B}^s_{\bar{\eta}_{i+1}^+}(x) \subseteq W^s(\Lambda)$, where $\bar{B}^+_{\bar{\eta}_{i+1}^+}(x)$ is the n-dimensional closed ball of radius $\bar{\eta}_{i+1}^+$ centered at x and contained in $W^s(x_+)$, with $x_+ = \Omega_+^\Gamma(x)$. The exit set and entry set of this window are defined as follows:

$$(\bar{\Delta}_{i+1}^+)^{\text{exit}} := \bigcup_{x\in(\bar{D}_{i+1}^+)^{\text{exit}}} \bar{B}^s_{\bar{\eta}_{i+1}^+}(x),$$
$$(\bar{\Delta}_{i+1}^+)^{\text{entry}} := \bigcup_{x\in(\bar{D}_{i+1}^+)^{\text{entry}}} \bar{B}^s_{\bar{\eta}_{i+1}^+}(x) \cup \bigcup_{x\in(\bar{D}_{i+1}^+)} \partial\bar{B}^s_{\bar{\eta}_{i+1}^+}(x).$$

We let $\bar{R}_{i+1}^+ := \bigcup_{y\in\bar{\Delta}_{i+1}^+} \bar{B}^u_{\bar{\delta}_{i+1}^+}(y)$, where $\bar{B}^-_{\bar{\delta}_{i+1}^+}(y)$ is the n-dimensional closed ball centered at y and contained in the image of $N_y^- \subseteq T_yM$ under the exponential map $\exp_y : N_y^- \to M$, and N^- is the normal bundle to $W^s(\Lambda)$. The Tubular Neighborhood Theorem implies that for $\bar{\delta}_{i+1}^+ > 0$ sufficiently small the set $\bar{R}_{i+1}^+$ is a homeomorphic copy of a $(l+2n)$-rectangle. The exit set and the entry set of $\bar{R}_{i+1}^+$

are defined by:

$$(\bar{R}^+_{i+1})^{\text{exit}} := \bigcup_{y\in(\bar{\Delta}^+_{i+1})^{\text{exit}}} \bar{B}^u_{\bar{\delta}^+_{i+1}}(y) \cup \bigcup_{y\in(\bar{\Delta}^+_{i+1}} \partial\bar{B}^u_{\bar{\delta}^+_{i+1}}(y),$$

$$(R^+_{i+1})^{\text{entry}} := \bigcup_{y\in(\bar{\Delta}^+_{i+1})^{\text{entry}}} \bar{B}^u_{\bar{\delta}^+_{i+1}}(y).$$

This completes the description of the thickening of the l-dimensional window $\bar{D}^-_i$ into an $(l+2n)$-dimensional window $\bar{R}^-_i$, and of the thickening of the l-dimensional window $\bar{D}^+_{i+1}$ into an $(l+2n)$-dimensional window $\bar{R}^+_{i+1}$. Note that, by construction, $\bar{R}^-_i$ and $\bar{R}^+_{i+1}$ are both contained in an ε-neighborhood of Γ.

Now we want to make $\bar{R}^-_i$ correctly aligned with $\bar{R}^+_{i+1}$ under the identity map. This is achieved by choosing $\bar{\delta}^+_{i+1}$ sufficiently small relative to $\bar{\delta}^-_i$, and by choosing $\bar{\eta}^-_i$ sufficiently small relative to $\bar{\eta}^+_{i+1}$. Thus, we have $\bar{\delta}^-_i > \bar{\delta}^+_{i+1}$ and $\bar{\eta}^-_i < \bar{\eta}^+_{i+1}$ (we stress that these inequalities alone may not suffice for the correct alignment). Choosing $\bar{\delta}^+_{i+1}$ and $\bar{\eta}^-_i$ small enough agrees with the constraints imposed by the Tubular Neighborhood Theorem.

Step 2. At this step, we expand the given l-dimensional window D^-_i to an $(l+2n)$-dimensional window R^-_i such that R^-_i is correctly aligned with $\bar{R}^-_i$ under some positive iterate, and we also expand the given l-dimensional window D^+_{i+1} to an $(l+2n)$-dimensional window R^+_{i+1} such that $\bar{R}^+_{i+1}$ is correctly aligned with $\bar{R}^+_{i+1}$ under some positive iterate.

We take a negative iterate $F^{-M}(\bar{R}^-_i)$ of $\bar{R}^-_i$, where $M > 0$. We have that $F^{-M}(\Gamma)$ is ε-close to Λ on a neighborhood in the C^1-topology, for all M sufficiently large. The vectors tangent to the fibers $W^u(x_-)$ in $\bar{R}^-_i$ are contracted, and the vectors transverse to $W^u(\Lambda)$ along $\bar{R}^-_i \cap W^u(\Lambda)$ are expanded by the derivative of F^{-M}. We choose and fix $M = N^-_i$ sufficiently large. We obtain that, in particular, $F^{-N^-_i}(\bar{R}^-_i)$ is ε-close to $D^-_i = F^{-N^-_i}(\hat{D}^-_i)$.

We now construct a window R^-_i about D^-_i that is correctly aligned with the window $F^{-N^-_i}(\bar{R}^-_i)$ under the identity. Note that each closed ball $\bar{B}^u_{\delta^-_i}(x)$, which is a part of $\bar{\Delta}^-_i$, gets exponentially contracted as it is mapped into $W^u(F^{-N^-_i}(x_-))$ by $F^{-N^-{}_i}$. By the Lambda Lemma (Proposition 2.4), each closed ball $\bar{B}^s_{\eta^-_i}(y)$ with $y \in \bar{\Delta}^-_i$, which is a part of $\bar{R}^-_i$, C^1-approaches a subset of $W^s(F^{-M}(y_-))$ under F^{-M}, as $M \to \infty$. For N^-_i sufficiently large, we may assume that $F^{-N^-_i}(\bar{B}^s_{\eta^-_i}(y))$ is ε-close to a subset of $W^s(F^{-N^-_i}(y^-))$ in the C^1-topology, for all $y \in \bar{\Delta}^-_i$. As $\hat{D}^-_i$ is correctly aligned with $\bar{D}^-_i$ under $(\Omega^\Gamma_-)^{-1}$, we have that $D^-_i = F^{-N^-_i}(\hat{D}^-_i)$ is correctly aligned with $F^{-N^-_i}(\bar{D}^-_i)$ under $(\Omega^{F^{-N^-_i}(\Gamma)}_-)^{-1}$. In other words, D^-_i is correctly aligned under the identity mapping with the projection of $F^{-N^-_i}(\bar{D}^-_i)$ onto Λ along the unstable fibres. Let us consider $0 < \delta^-_i < \varepsilon$ and $0 < \eta^-_i < \varepsilon$.

To define the window R^-_i we use a local linearization of the normally hyperbolic invariant manifold.

For Λ normally hyperbolic, let $N\Lambda = (E^u \oplus E^s)_{|\Lambda} = \bigcup_{p\in\Lambda}\{p\} \times E^u_p \times E^s_p$ be the normal bundle to Λ, and $NF = TF_{|N\Lambda}$, where

$$TF(p, v^u, v^s) = (F(p), DF_p(v^u), DF_p(v^s)) \text{ for all } p \in \Lambda, v^u \in E^u, v^s \in E^s.$$

By Theorem 1 in [20], there exists a homeomorphisms h from an open neighborhood of the zero section of $N\Lambda$ to a neighborhood of Λ in M such that $F \circ h = h \circ NF$.

Since D_i^- is contractible the bundles are trivial on D_i^- and we can identify $(E^u \oplus E^s)_{D_i^-}$ with $D_i^- \times E_x^u \times E_x^s$. At each point $x \in D_i^-$ we define a rectangle $H_i^-(x)$ of the type $h(\{x\} \times \bar{B}^u_{\delta_i^-}(0) \times \bar{B}^s_{\eta_i^-}(0))$, where $\bar{B}^u_{\delta_i^-}(0)$ is the closed ball centered at 0 of radius δ_i^- in the unstable space E_x^u, and $\bar{B}^s_{\eta_i^-}$ is the closed ball centered at 0 of radius η_i^- in the stable space E_x^s. We set the exit and entry sets of $H_i^-(x)$ as $(H_i^-(x))^{\text{exit}} = h(\{x\} \times \partial\bar{B}^u_{\delta_i^-}(0) \times \bar{B}^s_{\eta_i^-}(0))$ and $(H_i^-(x))^{\text{entry}} = h(\{x\} \times \bar{B}^u_{\delta_i^-}(0) \times \partial\bar{B}^s_{\eta_i^-}(0))$.

Then we define the window R_i^- as follows:

$$R_i^- = \bigcup_{x \in D_i^-} H_i^-(x),$$

$$(R_i^-)^{\text{exit}} = \bigcup_{x \in (D_i^-)^{\text{exit}}} H_i^-(x) \cup \bigcup_{x \in D_i^-} (H_i^-(x))^{\text{exit}},$$

$$(R_i^-)^{\text{entry}} = \bigcup_{x \in (D_i^-)^{\text{entry}}} H_i^-(x) \cup \bigcup_{x \in D_i^-} (H_i^-(x))^{\text{entry}}.$$

In order to ensure the correct alignment of R_i^- with $F^{-N_i^-}(\bar{R}_i^-)$ under the identity map, it is sufficient to choose δ_i^-, η_i^- such that $\bigcup_{x \in D_i^-} h(\{x\} \times \bar{B}^u_{\delta_i^-}(0) \times \{0\})$ is correctly aligned with $F^{-N_i^-}(\bar{\Delta}_i^-)$ under the identity map (the exit sets of both windows being in the unstable directions), and that each closed ball $F^{-N_i^-}(\bar{B}^s_{\eta_i^-})$ intersects R_i in a closed ball that is contained in the interior of $F^{-N_i^-}(\bar{B}^s_{\eta_i^-})$. The existence of suitable δ_i^-, η_i^- follows from the exponential contraction of $\bar{\Delta}_i^-$ under negative iteration, and from the Lambda Lemma applied to $\bar{B}^s_{\eta_i^-}(y)$ under negative iteration.

In a similar fashion, we construct a window R_{i+1}^+ contained in an ε-neighborhood of Λ such that $\bar{R}_{i+1}^+$ is correctly aligned with R_{i+1}^+ under $F^{N_{i+1}^+}$. The window R_{i+1}^+, and its entry and exit sets, are defined by:

$$R_{i+1}^+ = \bigcup_{x \in D_{i+1}^+} H_{i+1}^+(x),$$

$$(R_{i+1}^+)^{\text{exit}} = \bigcup_{x \in (D_{i+1}^+)^{\text{exit}}} H_{i+1}^+(x) \cup \bigcup_{x \in D_{i+1}^+} (H_{i+1}^+(x))^{\text{exit}},$$

$$(R_{i+1}^+)^{\text{entry}} = \bigcup_{x \in (D_{i+1}^+)^{\text{entry}}} H_{i+1}^+(x) \cup \bigcup_{x \in D_{i+1}^+} (H_{i+1}^+(x))^{\text{entry}},$$

where $H_{i+1}^+(x) = h(\{x\} \times \bar{B}^u_{\delta_{i+1}^+}(0) \times \bar{B}^s_{\eta_{i+1}^+}(0))$, $(H_{i+1}^+(x))^{\text{exit}}$, and $(H_{i+1}^+(x))^{\text{entry}}$ are defined as before for some appropriate choices of radii $\delta_{i+1}^+, \eta_{i+1}^+ > 0$.

Step 3. At this step, we take the $(l + 2n)$-dimensional window R_{i+1}^+ and $\bar{R}_{i+1}^-$ as constructed in the previous step, and we make R_{i+1}^+ correctly aligned with $\bar{R}_{i+1}^-$ under some positive iterate.

Suppose that we have constructed the window R^+_{i+1} about the l-dimensional rectangle $D^+_{i+1} \subseteq \Lambda$ and the window R^-_{i+1} about the l-dimensional rectangle $R^-_{i+1} \subseteq \Lambda$. Under positive iterations, the rectangle $\bar{B}^u_{\delta^+_{i+1}}(0) \times \bar{B}^s_{\eta^+_{i+1}}(0) \subseteq E^u \oplus E^s$ gets exponentially expanded in the unstable direction and exponentially contracted in the stable direction by DF. Thus $\bar{B}^u_{\delta^+_{i+1}}(0) \times \bar{B}^s_{\eta^+_{i+1}}(0)$ is correctly aligned with $\bar{B}^u_{\delta^-_{i+1}}(0) \times \bar{B}^s_{\eta^-_{i+1}}(0)$ under the power $DF^{N^0_{i+1}}$ of DF, provided N^0_{i+1} is sufficiently large. This implies that $F^{N^0_{i+1}}(h(\{x\} \times \bar{B}^u_{\delta^+_{i+1}}(0) \times \bar{B}^s_{\delta^+_{i+1}}(0)))$ is correctly aligned with $h(F^{N^0_{i+1}}(x) \times \bar{B}^u_{\delta^-_{i+1}}(0) \times \bar{B}^s_{\delta^-_{i+1}}(0))$ under the identity map (both rectangles are contained in $h(F^{N^0_{i+1}}(x) \times E^u \times E^s)$).

Since D^+_{i+1} is correctly aligned with D^-_{i+1} under $F^{N^0_i}$, the product property of correctly aligned windows implies that R^+_{i+1} is correctly aligned with R^-_{i+1} under $F^{N^0_{i+1}}$, provided that N^0_{i+1} is sufficiently large.

Step 4. At this step we will use the previous steps to construct a bi-infinite sequences of windows $\{R^\pm_i, \bar{R}^\pm_i\}_{i\in\mathbb{Z}}$ such that, for each i, the windows $\{R^\pm_i\}$ are obtained by thickening the rectangles $\{D^\pm_i\} \subseteq \Lambda$, the windows $\{\bar{R}^\pm_{i+1}\}$ are obtained by thickening some rectangles $\{\bar{D}^\pm_i\} \subseteq \Gamma$, and, moreover, R^-_i is correctly aligned with $\bar{R}^-_i$ under $F^{N^-_i}$, $\bar{R}^-_i$ is correctly aligned with $\bar{R}^+_{i+1}$ under the identity map, $\bar{R}^+_{i+1}$ is correctly aligned with R^+_{i+1} under $F^{N^+_{i+1}}$, and R^+_{i+1} is correctly aligned with R^-_{i+1} under $F^{N^0_i}$.

We can assume without loss of generality that Λ and Γ are compact. We fix an ε-neighborhood V of Λ. Using the compactness of Λ and Γ and the uniform boundedness of the iterates N^-_i, N^+_i, N^0_i, we now show how to choose the sizes of the stable and unstable components of the windows $\{R^\pm_i, \bar{R}^\pm_i\}_{i\in\mathbb{Z}}$ constructed in the previous steps in a uniformly bounded manner.

For each point x in Λ we consider a $(2n)$-dimensional window $h(\{x\} \times \bar{B}^u_\delta \times \bar{B}^s_\eta)$, for some $0 < \delta, \eta < \varepsilon$, where h is the local conjugacy between F and DF near Λ. Then $F^{N^0_i}(h(\{x\} \times \bar{B}^u_\delta \times \bar{B}^s_\eta)$ is correctly aligned with $h(\{F^{N^0_i}(x)\} \times \bar{B}^u_\delta(0) \times \bar{B}^s_\eta(0))$, for all $n^0_1 \le N^0_i \le n^0_2$, provided that n^0_1 is chosen sufficiently large. For each i, we thicken D^+_i and D^-_i into full dimensional windows R^+_i and of R^-_i respectively, as described in Step 2, where for the sizes of the components of these windows we choose $\delta^\pm_i = \delta$ and $\eta^\pm_i = \eta$ for all i. Since D^+_i is correctly aligned with D^-_i under $F^{N^0_i}$, then, as in Step 3, it follows that R^+_i is correctly aligned with R^-_i under $F^{N^0_i}$.

We also define the set

$$\Upsilon^0 = \bigcup_{x\in\Lambda} h(\{x\} \times \bar{B}^s_\eta(0) \times \bar{B}^s_\delta(0)).$$

This set cannot be realized as a window since it does not have exit/entry directions associated to the Λ components. However, for each $x \in \Lambda$, the set $h(\{x\} \times \bar{B}^s_\eta(0) \times \bar{B}^u_\delta(0))$ is a well defined window, with the exit given by the hyperbolic unstable directions. Note that $\Upsilon^0(x) \subseteq h(\{x\} \times \bar{W}^u(x) \times \bar{W}^s(x))$ for each $x \in \Gamma$.

We let $\bar{\Delta}^- = \bigcup_{x\in\Gamma} \bar{B}^u_{\bar{\delta}^-}(x)$, with $\bar{B}^u_{\bar{\delta}^-}(x)$ being the closed ball centered at x of radius $\bar{\delta}^-$ in $W^u(x_-)$. For each point $y \in \bar{\Delta}^-$ we consider the closed ball $\bar{B}^s_{\bar{\eta}^-}(y)$ centered at y of radius $\bar{\eta}^-$ in the image under $\exp_y$ of the normal subspace N_y to $W^u(\Lambda)$ at y. Similarly, we let $\bar{\Delta}^+ = \bigcup_{x\in\Gamma} \bar{B}^s_{\bar{\eta}^+}(x)$, where $\bar{B}^u_{\bar{\eta}^+}(x) \subseteq W^s(x_+)$, and for each $y \in \bar{\Delta}^+$ we consider the closed ball $\bar{B}^u_{\bar{\delta}^+}(y)$ in the image under $\exp_y$ of the

normal subspace N_y to $W^s(\Lambda)$ at y. We define the sets

$$\Upsilon^- = \bigcup_{y\in\bar\Delta^-} \bar B^s_{\bar\eta^-}(y),\ \Upsilon^+ = \bigcup_{y\in\bar\Delta^+} \bar B^u_{\bar\delta^+}(y).$$

These sets cannot be realized as windows as there are no well defined exit/entry directions associated to their Γ components. However, for each $x\in\Gamma$, the set $\Upsilon^-(x) = \bigcup_{y\in B^u_{\bar\delta^-}(x)} \bar B^s_{\bar\eta^-}(y)$ is a well defined $(2n)$-dimensional window, with the exit given by the hyperbolic unstable directions. Note that $\Upsilon^-(x)\subseteq \bigcup_{y\in W^u(x_-)} \exp_y(N_y)$. The intersection of $\bigcup_{y\in W^u(x_-)} \exp_y(N_y)$ with Υ^+ defines a window $\Upsilon^+(x)$ with the exit given by the hyperbolic unstable directions. Due to the compactness of Γ, there exist $\delta^\pm,\eta^\pm$ such that $\Upsilon^-(x)$ is correctly aligned with $\Upsilon^+(x)$ for all $x\in\Gamma$. We choose and fix such $\delta^\pm,\eta^\pm$. We define the windows $\bar R_i^\pm$ at Step 1 with the choices of $\delta_i^\pm=\delta^\pm$, and $\eta_i^\pm=\eta^\pm$, for all i. It follows that $\bar R_i^-$ is correctly aligned with $\bar R_i^+$ under the identity map for all i.

Due to the compactness of Γ and the uniform expansion and contraction of the hyperbolic directions, there exist n_1^-,n_1^+ such that, for all $N_i^->n_1^-$, $N_i^+>n_2^+$, we have $F^{-N_i^-}(\Gamma)\subseteq V$ and $F^{N_i^+}(\Gamma)\subseteq V$ for all $i\in\mathbb{Z}$, where V is the neighborhood of Λ where the local linearization is defined. For any such n_1^-,n_1^+, the assumptions of Lemma 6.1 provide us with some $n_2^->n_i^-$, $n^+>n_i^-$. Moreover, we choose n_1^-,n_1^+ such that for all $N_i^->n_1^-$, $N_i^+>n_2^+$ we have

(i) $\Upsilon^0(F^{-N_i^-}(x_-))$ is correctly aligned with $F^{-N_i^-}(\Upsilon^-)\cap h(\{\tilde F^{-N_i^-}(x_-)\}\times \bar W^u(F^{-N_i^-}(x_-))\times \bar W^s(F^{-N_i^-}(x_-)))]$ under the identity map,

(ii) $F^{N_i^+}(\Upsilon^+(x))$ is correctly aligned with $\Upsilon^0\cap h(\{\tilde F^{N_i^+}(x_+)\}\times \bar W^u(F^{N_i^+}(x_+))\times \bar W^s(F^{N_i^+}(x_+)))]$ under the identity map.

From these choices, it follows that the windows R_i^-,R_i^+ constructed in Step 2 satisfy that R_i^- is correctly aligned with $\bar R_i^-$ under $F^{N_i^-}$, and $\bar R_i^+$ is correctly aligned with R_i^+ under $F^{N_i^+}$.

This concludes the construction of windows $\{R_i^\pm,\bar R_i^\pm\}_{i\in\mathbb{Z}}$ of uniform sizes, such that R_i^- is correctly aligned with $\bar R_i^-$ under $F^{N_i^-}$, $\bar R_i^-$ is correctly aligned with $\bar R_{i+1}^+$ under the identity map, $\bar R_{i+1}^+$ is correctly aligned with R_{i+1}^+ under $F^{N_{i+1}^+}$, and R_{i+1}^+ is correctly aligned with R_{i+1}^- under $F^{N_i^0}$. The windows $R_i^\pm$ are contained in ε-neighborhoods of the given rectangles $D_i^\pm$, respectively, and the windows $R_i^\pm$ are contained in ε-neighborhoods of some rectangles $\bar D_i^\pm$, respectively.

By Theorem 5.3, there exits an orbit $F^N(z)$ that visits the windows $\{R_i^\pm,\bar R_i^\pm\}_{i\in\mathbb{Z}}$ in the prescribed order. More precisely, if $F^{N_i}(z)$ is the corresponding point in $\bar R_i^-\cap R_{i+1}^+$, then $F^{N_i+N_{i+1}^+}(z)$ is in R_{i+1}^+, $F^{N_i+N_{i+1}^++N_{i+1}^0}(z)$ is in R_{i+1}^-, and $F^{N_i+N_{i+1}^++N_{i+1}^0+N_{i+1}^-}(z)$ is in $\bar R_{i+1}^-\cap\bar R_{i+2}^+$, for all i. This means that $N_{i+1}=N_i+N_{i+1}^++N_{i+1}^0+N_{i+1}^-$ for all i. The existence of the shadowing orbit concludes the proof. □

Acknowledgments. Part of this work has been done while M.G. was visiting the Centre de Recerca Matemàtica, Barcelona, Spain, for whose hospitality he is very grateful.

Appendix. In this section we discuss the application of the techniques discussed in this paper to show the existence of unstable orbits in dynamical systems. We

describe two models for Hamiltonian instability and we explain how the transition map and the shadowing lemma are utilized.

The large gap problem of Arnold diffusion. The first model is related to the Arnold diffusion problem for Hamiltonian systems [1]. This problem conjectures that generic Hamiltonian systems that are close to integrable possess trajectories the move 'wildly' and 'arbitrarily far'. The model, from [6], describes a rotator and a pendulum with a small, periodic coupling. Consider the time-dependent Hamiltonian,

$$H_\mu(p,q,I,\phi,t) \quad = \quad h_0(I) + P_\pm(p,q) + \mu h(p,q,I,\phi,t;\mu), \tag{7}$$

where $(p,q,I,\phi,t) \in (\mathbb{R}\times\mathbb{T}^1)^2 \times \mathbb{T}^1$, and assume:

(i) V, h_0 and h are uniformly C^r with r sufficiently large;
(ii) $P_\pm(p,q) = \pm(\frac{1}{2}p^2 + V(q))$ where V is periodic in q of period 2π and has a unique non-degenerate global maximum at $(0,0)$; thus $P_\pm(p,q)$ has a homoclinic orbit $(p^0(\sigma), q^0(\sigma))$ to $(0,0)$, with $\sigma \in \mathbb{R}$;
(iii) h_0 satisfies a uniform twist condition $\partial^2 h_0/\partial I^2 > \theta$, for some $\theta > 0$ and all I in some interval (I^-, I^+), with $I^- < I^+$ independent of μ;
(iv) h is a trigonometric polynomial in (ϕ, t), periodic of period 2π in both ϕ, t,
(v) The Melnikov potential associated to $(p^0(\sigma), q^0(\sigma))$, given by

$$\begin{aligned}\mathcal{L}(I,\phi,t) = \quad -\int_{-\infty}^{\infty} \quad & \big[h(p^0(\sigma), q^0(\sigma), I, \phi+\omega(I)\sigma, t+\sigma; 0) \\ & -h(0,0,I,\phi+\omega(I)\sigma, t+\sigma;0)\big]\, d\sigma;\end{aligned}$$

where $\omega(I) = (\partial h_0/\partial I)(I)$, satisfies the following non-degeneracy conditions:

(v.a) For each $I \in (I^-, I^+)$, and each (ϕ, t) in some open set in $\mathbb{T}^1 \times \mathbb{T}^1$, the map

$$\tau \in \mathbb{R} \to \mathcal{L}(I, \phi - \omega(I)\tau, t-\tau) \in \mathbb{R}$$

has a non-degenerate critical point τ^*, which can be parameterized as

$$\tau^* = \tau^*(I,\phi,t);$$

(v.b) For each (I,ϕ,t) as above, the function

$$(I,\phi,t) \to \frac{\partial \mathcal{L}}{\partial \phi}(I, \phi-\omega(I)\tau^*, t-\tau^*)$$

is non-constant, negative for P_-, and positive for P_+;

(v.c) The perturbation term h satisfies some additional non-degeneracy conditions described in hypothesis (H5) of Theorem 7 in [6].

The objective is to show that there exists $\mu_0 > 0$ such that, for each $0 < \mu < \mu_0$, the Hamiltonian has a trajectory $x(t)$ such that $I(x(0)) < I^-$ and $I(x(T)) > I^+$ for some $T > 0$.

In the sequel, we show that the arguments in [6, 13, 8, 15] can be combined with the techniques developed in this paper to prove the existence of diffusing trajectories as above.

(1) We can make the Hamiltonian H_μ into an autonomous Hamiltonian by adding an extra variable A symplectically conjugate with the time t. The variable A has no dynamical role. We then restrict to an energy level, which can be parametrized by the variables (p,q,I,ϕ,t) with A an implicit function of these variables. When $\mu = 0$ the set $\tilde{\Lambda}_0 = \{(p,q,I,\phi,t),\, p = q = 0, I \in [I^-, I^+]\}$ is a 3-dimensional normally

hyperbolic invariant manifold with boundary for the flow of H_0. It is foliated by 2-dimensional invariant tori $\tilde{\mathcal{T}}_{I'} = \{(p, q, I, \phi, t),\ p = q = 0, I = I'\}$ with $I' \in [I^-, I^+]$. The stable and unstable manifolds of $\tilde{\Lambda}_0$ coincide, i.e. $W^u(\tilde{\Lambda}_0) = W^s(\tilde{\Lambda}_0)$. Also $W^u(\tilde{\mathcal{T}}_{I'}) = W^s(\tilde{\mathcal{T}}_{I'})$ for all $I' \in [I^-, I^+]$. This follows from (ii).

(2) There exists $\mu_0 > 0$ small such that for each $0 < \mu < \mu_0$ the manifold $\tilde{\Lambda}_0$ has a continuation $\tilde{\Lambda}_\mu$ that is a normally hyperbolic invariant manifold for the flow of H_μ. Inside Λ_μ there are finitely many resonant regions, due to (iv). Outside the resonant regions, the conditions (i), (iii) allow one to apply the KAM theorem, and obtain KAM tori that are at a distance of order $O(\mu^{3/2})$ from one another. The resonant regions yield gaps of size $O(\mu^{j/2})$ between the KAM tori, where j is the order of the resonance. Only the resonances of order 1 and 2 are of interest, as they produce gaps of size $O(\mu)$ and $O(\mu^{1/2})$ respectively. Inside each resonant region, there exist primary KAM tori and secondary KAM tori (homotopically trivial relative to Λ_ε). They can be chosen to be $O(\mu^{3/2})$ from one another.

(3) The conditions (v) on the Melnikov potential imply that if μ_0 is chosen small enough then $W^u(\tilde{\Lambda}_\mu)$ intersects $W^s(\tilde{\Lambda}_\mu)$ transversally at an angle $O(\mu)$. Choose and fix a homoclinic channel $\tilde{\Gamma}_\mu$ as in (1) and (2), and let $S^{\tilde{\Gamma}_\mu}$ denote the corresponding scattering map for the flow of H_μ, as in Definition 3.1. It turns out that the scattering map has the property that there exists a constant $C > 0$ such that for each $I' \in [I^-, I^+]$ there exists $I'' \in [I^-, I^+]$ with $|I'' - I'| > C\mu$ and $x', x'' \in \tilde{\Lambda}_\mu$ with $I(x') = I', I(x'') = I''$, such that $S^{\tilde{\Gamma}_\mu}(x') = x''$. In the above, one can always choose $I'' > I'$ or $I'' > I'$, as one wishes. That is, there are always points whose I-coordinates in increased or decreased by the scattering map by $O(\mu)$.

(4) Fix a Poincaré surface of section $\Sigma = \{(p, q, I, \phi, t),\ t = 0 \,(\mathrm{mod}\ 2\pi)\}$, and let F_μ be the first return map to Σ. By Theorem 2.3 $\Lambda_0 = \tilde{\Lambda}_0 \cap \Sigma$ is a normally hyperbolic invariant manifold with boundary for F_μ. The map F_μ restricted to Λ_μ satisfies a uniform twist condition, due to (iii). Each 2-dimensional torus $\tilde{\mathcal{T}}_{I'}$ in $\tilde{\Lambda}_\mu$ intersects Σ in a 1-dimensional $\mathcal{T}_{I'}$ in Λ_μ. From Subsection 3.2 it follows that $\Gamma_\mu = \tilde{\Gamma}_\mu \cap \Sigma$ is a homoclinic channel. The scattering map $S^{\Gamma_\mu} : U_\varepsilon^- \to U_\varepsilon^+$ associated to Γ^μ for F_μ is related to $S^{\tilde{\Gamma}_\mu}$ by the relation given in Proposition 3.

(5) Choose a sequence $\{\mathcal{T}_{I_j}\}_{j\in\mathbb{Z}}$ of KAM tori (primary or secondary) in Λ_μ with the following properties: (a) Each leave $\mathcal{T}_{I_j}$ is within $O(\mu)$, relative to the I-variable, from the next leave $\mathcal{T}_{I_{j+1}}$, (b) S^{Γ_μ} takes each $\mathcal{T}_{I_j}$ transversally across $\mathcal{T}_{I_{j+1}}$, for all n. From Proposition 2, $W^u(\mathcal{T}_{I_j})$ intersects transversally $W^s(\mathcal{T}_{I_{j+1}})$ at some point $z_j \in \Gamma_\mu$. Thus, the set $\{\mathcal{T}_{I_j}\}_{j\in\mathbb{Z}}$, together with the transverse homoclinic connections among consecutive tori, forms a transition chain.

(6) Now we explain how Theorem 6.1 is applied to this problem. We have to show that the assumptions of the theorem are met for some sequence of 2-dimensional windows $\{D_j^-, D_j^+\}$ in Λ_ε. Following the arguments in [13], for each j we can construct a pair of windows $\hat{D}_j^- \subseteq U_\varepsilon^-$, $\hat{D}_{j+1}^+ \subseteq U_\varepsilon^+$, with $\hat{D}_j^-$ in some neighborhood of $\mathcal{T}_{I_j}$ and $\hat{D}_{j+1}^+$ in some neighborhood of $\mathcal{T}_{I_{j+1}}$ such that $\hat{D}_j^-$ is correctly aligned with $\hat{D}_{j+1}^+$ under S^{Γ_μ}. The exit and entry directions of each window are 1-dimensional. The window $\hat{D}_j^-$ is chosen to have its entry set components on some pair of tori $\mathcal{T}'_{I_j}$, $\mathcal{T}''_{I_j}$ neighboring $\mathcal{T}_{I_j}$ on both its sides in Λ_ε, and the window $\hat{D}_{j+1}^+$ is chosen to have its exit components set on some pair of tori $\mathcal{T}'_{I_{j+1}}$, $\mathcal{T}''_{I_{j+1}}$ neighboring $\mathcal{T}_{I_{j+1}}$ on both its sides in Λ_ε.

Choose some positive integers n_1^0, n_1^-, n_1^+. Choose an open neighborhood $\mathcal{N}(\Lambda_\varepsilon)$ of Λ_ε in Σ on which the local linearization of the normally hyperbolic invariant manifold from Theorem 1 in [20] applies. Then for each j there exists $N_j^- > n_1^-$ such that $F^{-N_j^-}(z_j)$ is contained in $\mathcal{N}(\Lambda_\varepsilon)$, and there exists $N_{j+1}^+ > n_1^+$ such that $F^{N_{j+1}^+}(z_j)$ is contained in $\mathcal{N}(\Lambda_\varepsilon)$. Due to the compactness of Γ_μ, Λ_μ, one can choose the numbers N_j^-, N_{j+1}^+ uniformly bounded above by some n_2^-, n_2^+, respectively, for all j.

Now let $D_j^- := F^{-N_j^-}(\hat{D}_j^-)$ and $D_{j+1}^+ := F^{N_{j+1}^+}(\hat{D}_{j+1}^+)$. By construction, these sets satisfy condition (i) of Theorem 6.1. By Definition 4.2, we have that D_j^- is correctly aligned with D_{j+1}^+ under the transition map $S^{\Gamma_\mu}_{N_j^-, N_{j+1}^+}$. This ensures condition (ii) of Theorem 6.1. Now using the twist condition, for each j there exists a large enough N_j^0 such that D_j^+ is correctly aligned with D_j^-. For this we use the fact that the exit set components of D_j^+ and the entry set components of D_j^- lie on $\mathcal{T}'_{I_j}$, $\mathcal{T}''_{I_j}$, as in [15]. This way we fulfill condition (iii) of Theorem 6.1. We can always choose N_j^0 as large as we want, and in particular $N_j^0 > n_1^0$. The number of iterates N_j^0 to achieve this correct alignment depends only on the twist condition on Λ_ε, on the sizes of the windows, and on the location of the windows D_j^+, D_j^- about $\mathcal{T}_{I_j}$. Since the sizes of the windows are uniformly bounded, we can choose the number N_j^0 so that they are all bounded above by some n_2^0, i.e., $N_j^0 < n_2^0$ for all j. At this point, given positive integers n_1^0, n_1^-, n_1^+, we have obtained positive integers $n_2^0 > n_1^0$, $n_2^- > n_1^-$, $n_2^+ > n_1^+$, and sequences N_j^0, N_j^-, N_j^+ as specified by Theorem 6.1. Then, for every $\varepsilon > 0$, there exists an orbit $\{F^N(z)\}_{n\in\mathbb{Z}}$ that visits the ε-neighborhoods of the windows $\{D_j^-, D_j^+\}$ in the prescribed order. In particular, we obtain diffusing orbits and symbolic dynamics.

We should note that the usage of the KAM theorem to construct correctly aligned windows in the above argument is not necessary, as it is done here only to simplify the exposition. Instead, one can only use the averaging method as in [13] and construct the windows about the almost-invariant level sets of the averaged energy. This alternative based on the averaging method lowers the regularity requirements from condition (i) above.

As an alternative to the diffusion mechanism described above, we can cross the large gaps corresponding to the resonances of order 1 and 2, by following Birkhoff connecting orbits, as in [15], or Mather connecting orbits, as in [16]. This mechanism allows one to get rid of the assumption (v.c) above.

The spatial circular restricted three-body problem. The second model is the spatial circular restricted three-body problem, in the case of the Sun-Earth system. We follow [4]. This problem considers the spatial motion of an infinitesimal mass under the gravitational influence of Sun and Earth, of masses m_1, m_2, respectively, that are assumed to move on circular orbits about their center of mass. Let $\mu = m_2/(m_1 + m_2)$. We can translate the equations of motion of the infinitesimal body relative to a co-rotating frame that moves together with m_1, m_2, and then describe the dynamics by a Hamiltonian system of Hamiltonian function

$$H(x, y, z, p_x, p_y, p_z) = \frac{1}{2}(p_x^2 + p_y^2 + p_z^2) + yp_x - xp_y - \frac{1-\mu}{r_1} - \frac{\mu}{r_2}, \tag{8}$$

where $r_1^2 = (x-\mu)^2 + y^2 + z^2$ and $r_2^2 = (x-\mu+1)^2 + y^2 + z^2$. The system has five equilibrium points; one of them, denoted L_1, lies between the two primaries. Its stability is of saddle $\times$ center $\times$ center type. We focus our attention on the dynamics near L_1. At a given energy level, near L_1 we can distinguish a family of quasi-periodic orbits that are uniquely defined by their out-of-plane amplitude of the motion. The objective is to show that there exits trajectories that move from near one such a quasi-periodic orbit to near another, in the prescribed order, and so to change the out-of-plane amplitude of the motion near L_1 with zero cost. The mechanism to achieve such trajectories involves starting about a quasi-periodic orbit about L_1 of some out-of-plane amplitude, moving the infinitesimal mass around one of the primaries, returning to L_1, and moving about some other quasi-periodic orbit about L_1 of a different out-of-plane amplitude, and so on. Since this problem is not close to integrable, the methods from perturbation theory do not apply. The approach discussed below is semi-numerical.

(1) Fix an energy level h slightly above the energy level of L_1, so that the dynamical channel between the m_1-region and the m_2-region is open. Restrict the study of the dynamics to the 5-dimensional energy manifold $M_h = \{H = h\}$.

(2) Compute numerically the 3-dimensional normally hyperbolic invariant manifold $\tilde{\Lambda} \subseteq M_h$ by writing the Hamiltonian in Birkhoff normal form in a neighborhood of L_1. By taking a high-order truncation of the normal form we obtain a system of action-angle coordinates $(I_1, I_2, \phi_1, \phi_2)$ on $\tilde{\Lambda}$, where we can choose I_1 as the out-of-plane amplitude of a quasi-periodic orbit in $\tilde{\Lambda}$, and I_2 implicitly defined by the restriction to the energy level. As the truncated normal form is integrable, the numerically computed $\tilde{\Lambda} \subseteq M_h$ is filled with 2-dimensional invariant tori $\tilde{\mathcal{T}}_{I_1}$ parametrized by the out-of-plane amplitude I_1. Dynamically, these invariant tori are only almost invariant.

(3) The Birkhoff normal form is also used to compute the stable and unstable manifolds $W^s(\tilde{\Lambda})$, $W^u(\tilde{\Lambda})$ of the normally hyperbolic invariant manifold $\tilde{\Lambda}$. One shows numerically that $W^s(\tilde{\Lambda})$, $W^u(\tilde{\Lambda})$ intersect transversally along some homoclinic channel $\tilde{\Gamma}$. In particular, one can compute the scattering map $S^{\tilde{\Gamma}}$ for the flow as in [9]. We choose some $\varepsilon > 0$ sufficiently small, and choose the t_u, t_s to be the first times when $\phi^{-t_u}(\tilde{\Gamma})$, $\phi^{-t_s}(\tilde{\Gamma})$, respectively, land in the ε-neighborhood of $\tilde{\Lambda}$. We then compute the corresponding transition map $S^{\tilde{\Gamma}}_{t^u,t^s}$ as in Definition 4.1.

(4) We reduce the dimension of the problem by choosing a suitable Poincaré section, e.g. $\Sigma = \{\phi_2 = 0\}$. Let F denote the first return map to Σ. We have that $\Lambda = \Sigma \cap \tilde{\Lambda}$ is normally hyperbolic for F, and $\Gamma = \Sigma \cap \tilde{\Gamma}$ is a homoclinic channel. The intersections of the 2-dimensional tori $\tilde{\mathcal{T}}_{I_1}$ with the Poincaré section yields 1-dimensional tori $\mathcal{T}_{I_1}$ in Λ, each torus corresponding to a fixed value of I_1. The inner dynamics induced on the Poincaré section is a monotone twist map. Using the relationship between the transition map for a flow and the transition map for the return map from Proposition 4, we compute the transition map $S^{\Gamma}_{N^u,N^s}$ for F. The image of each 1-dimensional torus $\mathcal{T}_{I_1'}$ under $S^{\Gamma}_{N^u,N^s}$ is a curve along which the value of I_1 variable sometimes goes above and sometimes below the original value I_1'. See Figure 3.

(5) To design trajectories that visit some finite collection of I_1-level sets in the prescribed order, we first use the transition map $S^{\Gamma}_{N^u,N^s}$ to move between level sets. We obtain pairs of points x_j, x_{j+1} with $I(x_j) = (I_1)_j$, $I(x') = (I_1)_{j+1}$, and $S^{\Gamma}_{N^u,N^s}(x_j) = x_{j+1}$, moving from a level set $(I_1)_j$ to a level set $(I_1)_{j+1}$. Using

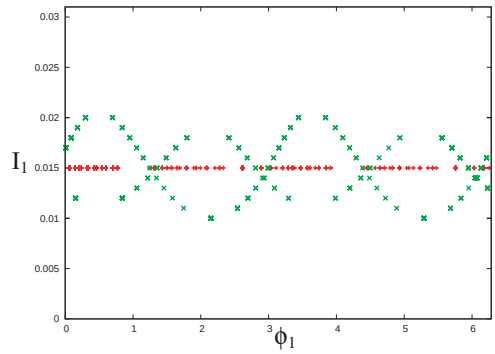

FIGURE 3. The effect of the transition map on action level sets.

continuation, we construct a window D_j^- about the level set $(I_1)_j$, and a window D_{j+1}^+ about the level set $(I_1)_{j+1}$, such that D_j^- is correctly aligned with D_{j+1}^+ under $S^\Gamma_{N^u,N^s}$. Similarly, we construct a window D_{j+1}^- about the level set $(I_1)_{j+1}$, and a window D_{j+2}^+ about a level set $(I_1)_{j+2}$, such that D_{j+1}^- is correctly aligned with D_{j+2}^+ under $S^\Gamma_{N^u,N^s}$. To align D_{j+1}^+ with D_{j+1}^- we take some large number of iterates N_j^0 such that D_{j+1}^+ is correctly aligned with D_{j+1}^- under $F^{N_j^0}$. We obtain the situation described in Theorem 6.1. In particular, we obtain diffusing orbits for which the action variable I_1 increases as much as possible.

We should note that, since the correct alignment of windows is robust, the fact that the tori $\mathcal{T}_{I_1}$ are only almost-invariant does not matter. This makes the method suitable for a computer assisted proof.

In both examples, the main advantage of using the transition map and the Theorem 6.1 is that, via these tools, one only needs to construct windows of lower dimension (the dimension of the normally hyperbolic invariant manifold) that are correctly aligned either under the transition map, or under some power of the inner map. Both these maps are defined on the lower dimensional normally hyperbolic invariant manifold. The result from Theorem 6.1 is the existence of a certain trajectory that lives in the full dimensional phase space.

REFERENCES

[1] V. I. Arnold, *Instability of dynamical systems with several degrees of freedom*, Sov. Math. Doklady, **5** (1964), 581–585.

[2] K. Burns and M. Gidea, "Differential Geometry and Topology. With a View to Dynamical Systems," Studies in Advanced Mathematics. Chapman & Hall/CRC, Boca Raton, FL, 2005.

[3] J. Cresson and C. Guillet, *Hyperbolicity versus partial-hyperbolicity and the transversality-torsion phenomenon*, J. Differential Equations, **244** (2008), 2123–2132.

[4] A. Delshams, M. Gidea and P. Roldan, *Arnold's mechanism of diffusion in the spatial circular restricted three-body problem: A semi-numerical argument*, preprint, 2010.

[5] A. Delshams, R. de la Llave and T. M. Seara, *A geometric approach to the existence of orbits with unbounded energy in generic periodic perturbations by a potential of generic geodesic flows of T^2*, Comm. Math. Phys., **209** (2000), 353–392.

[6] A. Delshams, R. de la Llave and T. M. Seara, *A geometric mechanism for diffusion in Hamiltonian systems overcoming the large gap problem: heuristics and rigorous verification on a model*, Mem. Amer. Math. Soc., **179** (2006), viii+141 pp.

[7] A. Delshams, R. de la Llave and T. M. Seara, *Geometric properties of the scattering map of a normally hyperbolic invariant manifold*, Adv. Math., **217** (2008), 1096–1153.

[8] A. Delshams, M. Gidea, R. de la Llave and T. M. Seara, *Geometric approaches to the problem of instability in Hamiltonian systems. An informal presentation*, in (Hamiltonian dynamical systems and applications), NATO Sci. Peace Secur. Ser. B Phys. Biophys., Springer, Dordrecht, (2008), 285–336.

[9] A. Delshams, J. Masdemont and P. Roldán, *Computing the scattering map in the spatial Hill's problem*, Discrete Contin. Dyn. Syst. Ser. B, **10** (2008), 455–483.

[10] R. W. Easton, *Homoclinic phenomena in Hamiltonian systems with several degrees of freedom*, J. Differential Equations, **29** (1978), 241–252.

[11] N. Fenichel, *Asymptotic stability with rate conditions*, Indiana Univ. Math. J., **23** (1973/74), 1109–1137.

[12] A. García, *Transition tori near an elliptic fixed point*, Discrete Contin. Dynam. Systems, **6** (2000), 381–392.

[13] M. Gidea and R. de la Llave, *Topological methods in the instability problem of Hamiltonian systems*, Discrete Contin. Dyn. Syst., **14** (2006), 295–328.

[14] M. Gidea and C. Robinson, *Topologically crossing heteroclinic connections to invariant tori*, J. Differential Equations, **193** (2003), 49–74.

[15] M. Gidea and C. Robinson, *Obstruction argument for transition chains of tori interspersed with gaps*, Discrete Contin. Dyn. Syst. Ser. S, **2** (2009), 393–416.

[16] M. Gidea, and C. Robinson, *Diffusion along transition chains of invariant tori and Aubry-Mather sets*, Ergodic Theory and Dynamical Systems, DOI: 10.1017/S0143385712000363.

[17] M. W. Hirsch, C. C. Pugh and M. Shub, "Invariant Manifolds," Lecture Notes in Math., vol. 583, Springer-Verlag, Berlin, 1977.

[18] H. Hofer, K. Wysocki and E. Zehnder, *The dynamics on three-dimensional strictly convex energy surfaces*, Ann. of Math. (2), **148** (1998), 197–289.

[19] J. P. Marco, *A normally hyperbolic lambda lemma with applications to diffusion*, Preprint, 2008.

[20] C. Pugh and M. Shub, *Linearization of normally hyperbolic diffeomorphisms and flows*, Invent. Math., **10** (1970), 187–198.

[21] C. Robinson, "Dynamical Systems. Stability, Symbolic Dynamics, and Chaos," Studies in Advanced Mathematics. CRC Press, Boca Raton, FL, second edition, 1999.

[22] P. Zgliczyński and M. Gidea, *Covering relations for multidimensional dynamical systems*, J. Differential Equations, **202** (2004), 32–58.

Received April 2011; revised December 2011.

E-mail address: Amadeu.Delshams@upc.edu
E-mail address: M-Gidea@neiu.edu
E-mail address: Pablo.Roldan@upc.edu